**1. Introduction: ..... 1**
Thank You ..... 1
This User Guide ..... 1
Security of Your Terminal ..... 1
Caring for Your Terminal ..... 2
Keeping Records ..... 2
Paper Rolls ..... 2
Helpdesk Information ..... 3
Supervisor Password ..... 3
How Do I ... ..... 4
Quick Installation Checklist ..... 5

**2. Your Terminal ..... 7**
Terminal Model ..... 7
Terminal Layout ..... 7
Terminal Keypad ..... 8
Function Keys ..... 8
Entering and Correcting Data ..... 9
Terminal Display ..... 10
Display Icons ..... 10
Menu Screens ..... 12
Paper Loading ..... 13
Terminal Installation ..... 14
"Magic Cable" Installation ..... 16
Telephone Lines and Broadband ..... 18
Inserting a Chip Card ..... 19
Swiping a Card ..... 21

**3. Transactions ..... 22**
Sales - Inserted Cards ..... 22
Sales - Swiped Cards ..... 24
Sales with Gratuity (Tip Mode) ..... 25
Sales with Gratuity - Inserted Cards (On Ticket Method) ..... 26
Sales with Gratuity - Inserted Cards (On Screen Method) ..... 28
Sales with Gratuity - Swiped Cards ..... 30
Sales with Cashback ..... 31
Split Bills ..... 32
Refunds ..... 33
Mailorder Transactions (Customer Not Present) ..... 35
Mailorder - CSC/AVS Results ..... 35
Mailorder - Sales & Refunds ..... 36
Hotel Mode ..... 39
Reversals ..... 40
Duplicate Receipts ..... 40
Cash Advance ..... 41




Downloaded from www.Manualslib.com manuals search engine

Copyright © 1998 by this company. All rights reserved. No part of this publication may be reproduced, stored in a retrieval system, or transmitted, in any form or by any means, electronic, mechanical, photocopy, recording, or otherwise, without the prior written permission of this company.

The information contained in this manual has been verified at the time of this manual's printing. The manufacturer reserves the right to make any changes and improvements in the product described in this manual at any time and without notice.

All registered trademarks are the property of their respective owners.

## FCC Notice

This equipment complies with Part 68 of the FCC rules. Located on the bottom side of the modem is a label that contains, among other information, the FCC Registration Number and Ringer Equivalence Number (REN) for this equipment. Upon request, you must provide this information to your telephone company.

If your telephone equipment causes harm to the telephone network, the telephone company may discontinue your service temporarily. If possible, they will notify you in advance. But, if advance notice is not practical, you will be notified as soon as possible. You will also be informed of your right to file a complaint with the FCC.

Your telephone company may make changes in its facilities, equipment, operations, or procedures that could affect the proper functioning of your equipment. If they do, you will be notified in advance to give you an opportunity to maintain uninterrupted telephone service.

If this equipment should fail to operate properly, disconnect the equipment from the phone line to determine if it is causing the problem. If the problem is with the equipment, discontinue use and contact your dealer or vendor.

Downloaded from www.Manualslib.com manuals search engine

# PRECAUTIONS

- Do NOT install the unit in a location where it may be subjected to:
  — Direct sunlight or other sources of excessive heat
  — Fluid, rain or moisture
  — Excessive dirt or dust
  — Excessive vibration
- This unit is designed to be operated on a 12-volt DC negative-ground electrical system only.
- Choose the mounting location carefully so that the unit will not interfere with normal driving functions.
- Before making connections, disconnect the ⊖ terminal of the car battery to avoid short circuiting.

## Notes on CDs

- A defective or soiled disc stored in the disc magazine can cause the sound to drop out during play.
- Always handle a disc by holding its inner and outer edges.

- Do NOT touch the surface of the unlabeled side of the disc.
- Do NOT attach paper or tape etc. to a disc.

- Do NOT expose the discs to direct sunlight or excessive heat.

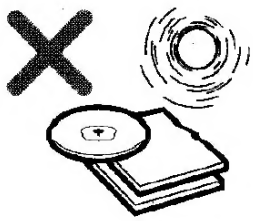

- Clean the discs before inserting them into the disc magazine. Always clean a disc from the center outward with a cleaning cloth.

- There may be burrs left on the inner and outer edges of a brand-new disc. The burr may cause the malfunction of the unit or sound drop-out. To prevent these problems, if the burr is left on the disc, be sure to remove them with a ball-point pen, etc. as illustrated.

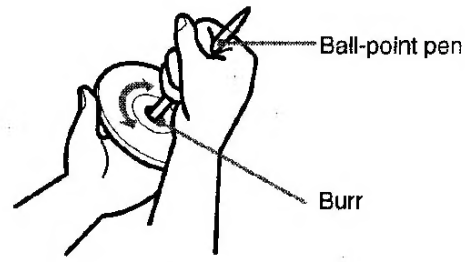


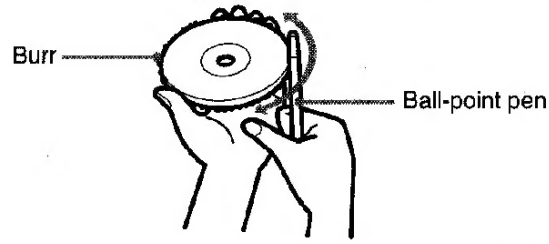


- NEVER use solvents such as benzine or alcohol to clean a disc.
- You cannot play an 8-cm (3-inch) CD — even with the specially designed adaptor.
- Do NOT use irregular shape CDs (example: heart-shaped, octagonal ones).
  It may result in malfunction.

## Notes on the disc magazine

- Do NOT leave the disc magazine in a place subject to excessive temperature or humidity.
- Do NOT insert more than one disc per slot.
- Do NOT drop the disc magazine.





Downloaded from www.Manualslib.com manuals search engine

**Explicación del funcionamiento**

- Pulse el botón Menú para iniciar la función del Menú en pantalla. Hay páginas adicionales del Menú que pueden cambiarse utilizando los botones +/-.

- Seleccione la página Menú que contiene el icono de ajuste relacionado con el ajuste que desea realizar. Pulse de nuevo el botón Menú. A continuación, utilice los botones +/- para resaltar el icono de ajuste deseado. Pulse de nuevo el botón Menú.
- Utilice los botones +/- para realizar el ajuste o configuración adecuada.
- Por ejemplo, para corregir la posición vertical, seleccione la primera página del Menú y, a continuación, pulse el botón Menú. A continuación, seleccione (Posición V) utilizando los botones +/-.

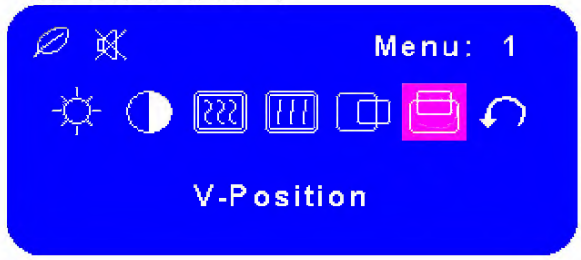


- Aparece una escala de ajuste después de pulsar el botón Menú. Utilice los botones +/- para cambiar la configuración de posición vertical. La posición vertical de la pantalla global cambiará según los ajustes que vaya realizando.

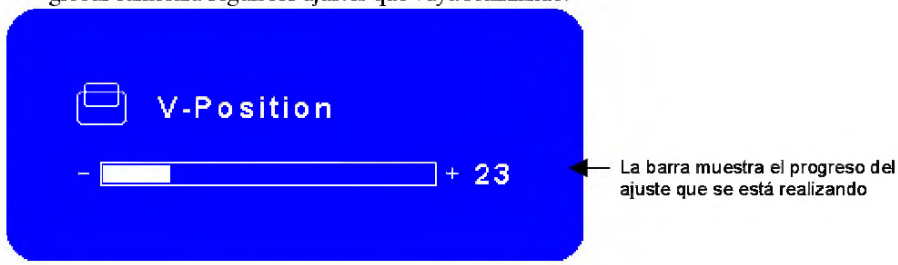


**Notas**

- El Menú en pantalla desaparece varios segundos después de terminar de pulsar los botones mientras realiza un ajuste.
- Cualquier cambio se guarda automáticamente en la memoria cuando el Menú en pantalla desaparece. Debería evitarse apagar el monitor mientras se utiliza el Menú.
- Los ajustes para Reloj, Fase y Posición se guardan para la sincronización de cada señal. Excepto para estos ajustes, el resto de los ajustes sólo tienen una configuración que se aplica a todas las sincronizaciones de señal.



Downloaded from www.Manualslib.com manuals search engine

System Options . . . . . 21
Bypass a Zone . . . . . 21
Turn the Door Chime On or Off . . . . . 22
View Alarm Memory . . . . . 22
Create an Additional Keypad Code . . . . . 23
Delete a Keypad Code . . . . . 24
System Testing . . . . . 25
Siren and Transmission Test . . . . . 25
Testing All Burglary Sensors . . . . . 26
Testing the Smoke Detector . . . . . 27
Testing the Doors and Windows Only . . . . . 27
Testing with Not Ready Zones . . . . . 29
Using GoTo (Optional Feature) . . . . . 30
Trouble Messages . . . . . 31
Standard Keypad . . . . . 31
Premium Keypad . . . . . 31
No AC Power Indication . . . . . 32
Low Battery Indication . . . . . 33
Communication Problem Indication . . . . . 34
Communication Radio Problem Indication (Optional Feature) . . . . . 34
Line Cut Indication (Optional Feature) . . . . . 35
Smart-Key™ Low Battery (Optional Feature) . . . . . 36
Upload/Download Failure . . . . . 36
Zone Trouble Indication . . . . . 36
Component Failure Indication . . . . . 37
Call ADT Indication . . . . . 37
Siren Failure Indication . . . . . 37
Keypad Not Working (Speaker Clicks) . . . . . 37
RF Interference Indication . . . . . 37
Cleaning the Smoke Detector . . . . . 38
If You Trigger an Alarm While Cleaning the Detector . . . . . 38
Service the Detector Every Two Years . . . . . 39
Setting the Clock . . . . . 39
Emergency Evacuation Plans . . . . . 39

Downloaded from www.Manualslib.com manuals search engine

# ⚠ Important safety instructions

Do not use metal utensils, which reflect microwaves and may cause electrical arcing. Do not put cans in the oven.

Only use the turntable and the turntable support designed for this oven. Do not operate the oven without the turntable.

To prevent the turntable from breaking:

(a) Before cleaning the turntable with water, leave the turntable to cool.

(b) Do not put hot foods or hot utensils on a cold turntable.

(c) Do not put cold foods or cold utensils on a hot turntable.

Do not place anything on the outer cabinet during operation.

Do not use plastic containers for microwaving if the oven is still hot from using the **GRILL** mode, **DUAL GRILL** mode and **AUTOMATIC** operation, because they may melt. Plastic containers must not be used during above modes unless the container manufacturer says they are suitable.

**NOTE:**

If you are unsure how to connect your oven, please consult an authorised, qualified electrician.

Neither the manufacturer nor the dealer can accept any liability for damage to the oven or personal injury resulting from failure to observe the correct electrical connection procedure.

Water vapour or drops may occasionally form on the oven walls or around the door seals and sealing surfaces. This is a normal occurrence and is not an indication of microwave leakage or a malfunction.



Downloaded from www.Manualslib.com manuals search engine

# Introduction

Thank you for purchasing this television set.
This handbook has been designed to help you install and operate your TV set.
We would strongly recommend that you read it thoroughly.

# Table of Contents


**Installation**
Presentation of the LCD Television ..... 2
Remote control ..... 2
Remote control keys ..... 3-4
Installing your television set ..... 5
Quick installation ..... 5
Program sort ..... 6
Manual store ..... 6
Other settings in the Install menu ..... 6

**Operation**
Picture settings ..... 7
Sound adjustments ..... 7
Feature settings ..... 7
Screen Formats ..... 8
Teletext ..... 9
Using the radio ..... 10
Using in PC monitor mode ..... 10
Using in HD (High Definition) Mode ..... 11

**Peripherals**
Video recorder ..... 12
Other equipment ..... 13
Side connections ..... 13
HD equipment ..... 13
Computer ..... 13

**Practical information**
Tips ..... 14
Glossary ..... 14


# Recycling

The packaging of this product is intended to be recycled. Apply to the local authorities for correct disposal.

**Disposal of your old product.**

Your product is designed and manufactured with high quality materials and components, which can be recycled and reused. When this crossed-out wheeled bin symbol is attached to a product it means the product is covered by the European Directive 2002/96/EC. Please inform yourself about the local separate collection system for electrical and electronic products.

Please act according to your local rules and do not dispose of your old products with your normal households waste. The correct disposal of your old product will help prevent potential negative consequences for the environment and human health.



Downloaded from www.Manualslib.com manuals search engine

# Compaq Technician Notes

Any product or assembly marked with these symbols indicates that the component exceeds the recommended weight for one individual to handle safely.

**WARNING:** To reduce the risk of personal injury or damage to the equipment, observe local occupational health and safety requirements and guidelines for manual material handling.

**WARNING:** Only authorized technicians trained by Compaq should attempt to repair this equipment. All troubleshooting and repair procedures are detailed to allow only subassembly/module-level repair. Any indications of component replacement or printed wiring board modifications may void any warranty.

**WARNING:** To reduce the risk of personal injury from electric shock and hazardous energy levels, do not exceed the level of repair specified in these procedures. Because of the complexity of the individual boards and subassemblies, do not attempt to make repairs at the component level or to make modifications to any printed wiring board. Improper repairs could create conditions that are hazardous.

**WARNING:** To reduce the risk of electric shock or damage to the equipment:

- If the system has multiple power supplies, disconnect power from the system by unplugging all power cords from the power supplies.
- Do not disable the power cord grounding plug. The grounding plug is an important safety feature. The computer is designed to be electrically grounded. Plug the AC power cord into a properly grounded AC outlet only.
- Plug the power cord into a grounded (earthed) electrical outlet that is easily accessible at all times.

**CAUTION:** To properly ventilate your system, you must provide at least 12 inches (30.5 cm) of clearance at the front and back of the computer.

**CAUTION:** The computer is designed to be electrically grounded. To ensure proper operation, plug the AC power cord into a properly grounded AC outlet only.

# Where to Go for Additional Help

In addition to this guide, the following information sources are available:

- User Documentation
- *Compaq Service Quick Reference Guide*
- Service Training Guides
- Compaq Service Advisories and Bulletins
- Compaq QuickFind
- Compaq Insight Manager
- Compaq Download Facility: Call 1-281-518-1418

Downloaded from www.Manualslib.com manuals search engine

## Warranty and Customer Service

ADTRAN will repair and return this product within 5 years from the date of shipment if it does not meet its published specifications or fails while in service. For detailed warranty, repair, and return information refer to the ADTRAN Equipment Warranty and Repair and Return Policy Procedure.

Return Material Authorization (RMA) is required prior to returning equipment to ADTRAN.

For service, RMA requests, or further information, contact one of the numbers listed at the end of this section.

## LIMITED PRODUCT WARRANTY

ADTRAN warrants that for 5 years from the date of shipment to Customer, all products manufactured by ADTRAN will be free from defects in materials and workmanship. ADTRAN also warrants that products will conform to the applicable specifications and drawings for such products, as contained in the Product Manual or in ADTRAN's internal specifications and drawings for such products (which may or may not be reflected in the Product Manual). This warranty only applies if Customer gives ADTRAN written notice of defects during the warranty period. Upon such notice, ADTRAN will, at its option, either repair or replace the defective item. If ADTRAN is unable, in a reasonable time, to repair or replace any equipment to a condition as warranted, Customer is entitled to a full refund of the purchase price upon return of the equipment to ADTRAN. This warranty applies only to the original purchaser and is not transferable without ADTRAN's express written permission. This warranty becomes null and void if Customer modifies or alters the equipment in any way, other than as specifically authorized by ADTRAN.

EXCEPT FOR THE LIMITED WARRANTY DESCRIBED ABOVE, THE FOREGOING CONSTITUTES THE SOLE AND EXCLUSIVE REMEDY OF THE CUSTOMER AND THE EXCLUSIVE LIABILITY OF ADTRAN AND IS IN LIEU OF ANY AND ALL OTHER WARRANTIES (EXPRESSED OR IMPLIED). ADTRAN SPECIFICALLY DISCLAIMS ALL OTHER WARRANTIES, INCLUDING (WITHOUT LIMITATION), ALL WARRANTIES OF MERCHANTABILITY AND FITNESS FOR A PARTICULAR PURPOSE. SOME STATES DO NOT ALLOW THE EXCLUSION OF IMPLIED WARRANTIES, SO THIS EXCLUSION MAY NOT APPLY TO CUSTOMER.

In no event will ADTRAN or its suppliers be liable to the Customer for any incidental, special, punitive, exemplary or consequential damages experienced by either the Customer or a third party (including, but not limited to, loss of data or information, loss of profits, or loss of use). ADTRAN is not liable for damages for any cause whatsoever (whether based in contract, tort, or otherwise) in excess of the amount paid for the item. Some states do not allow the limitation or exclusion of liability for incidental or consequential damages, so the above limitation or exclusion may not apply to the Customer.



Downloaded from www.Manualslib.com manuals search engine

# Section 4

## Viewing Images

**Step 1** At the Setup Wizard, select the desired camera from the list and click on the **Web Config** button.

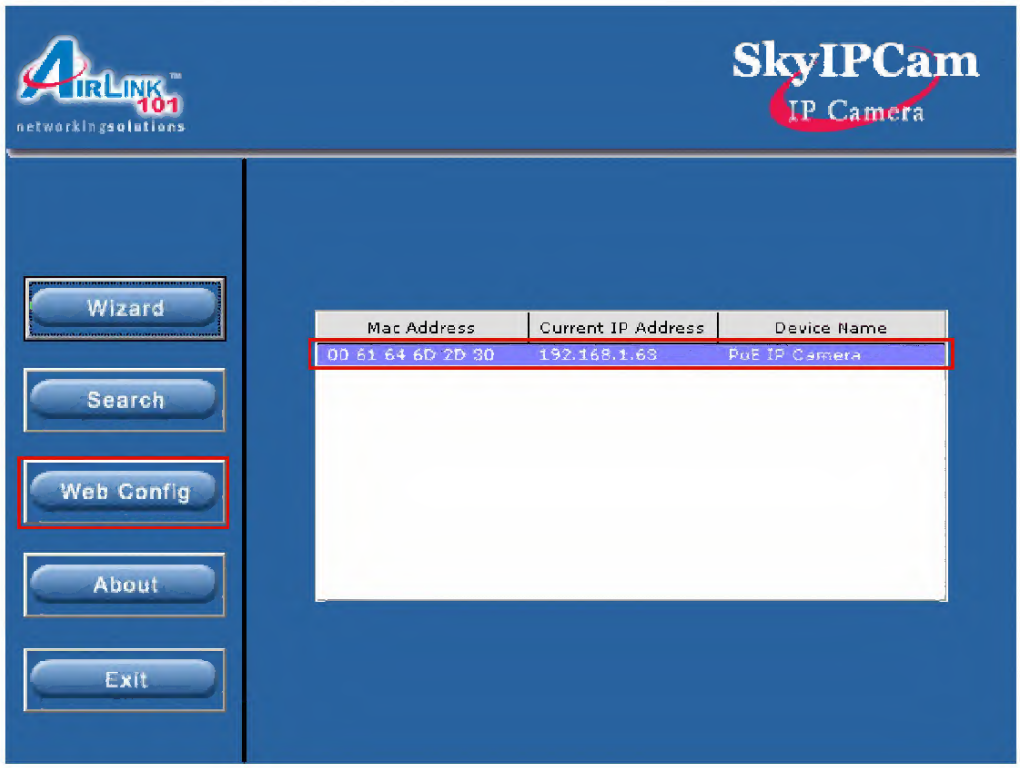


**Step 2** Enter the username and password for the network camera. The default username and password are both "**admin**".

Downloaded from www.Manualslib.com manuals search engine

## Setting the amount of rinse aid required

Only change the amount dispensed, if smears, milky spots (reduce the amount) or dried on water spots (increase the amount) can be seen on glasses and dishes. (See section "If dishwashing results are not satisfactory".) The dosage can be set from 1-6. The dosage is pre-set to "4" in the factory.

1. Open the dishwasher door.
2. Press the release button on the rinse aid compartment.
3. Open the cover.
4. Set the dosage level.
5. Press the lid shut until it clicks into place.
6. If rinse aid has leaked out, wipe it away with a cloth.

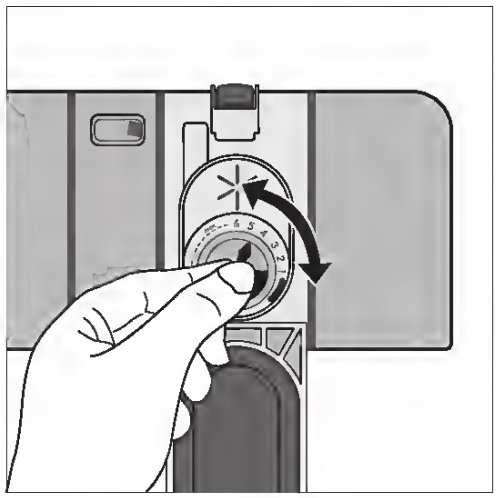



Downloaded from www.Manualslib.com manuals search engine

rameter, press the $CO_2$ key. Then, place the probe in the location you want to measure gas concentration.

### TEMP Key

The meter will always display temperature readings from the permanent sensor on the lower line of the display. When you wish to take an external temperature reading using an RTD probe, plug any three-pronged RTD probe into the right side. Then, press the TEMP key to view the temperature from the resistive temperature detector (RTD). The letters "Prb" will display on the top line of the display and the actual temperature from the RTD on the bottom line.

To return to reading temperatures from the permanent probe, press the TEMP key again.

*Note: If the external RTD probe becomes unplugged while in "Prb" mode, the display will read "over." If the RTD probe is not plugged in and the TEMP key is pressed, nothing will happen.*

## MANUAL TUNING OF CHANNELS

| Step | Press button | | Result on screen* |
|---|---|---|---|
| 7 | ① ② ③ ④ ⑤ ⑥ ⑦ ⑧ ⑨ ⓪ | Key in the channel number | |
| 8 | ^ | Press button to select **SEARCH** | 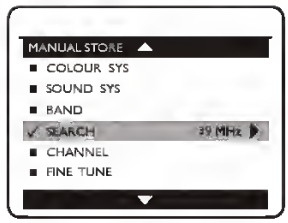 |
| 9 | < or > | Start manual searching. Searching stops once a transmitting signal is found. You can also enter frequency of the channel using digital keys directly. | 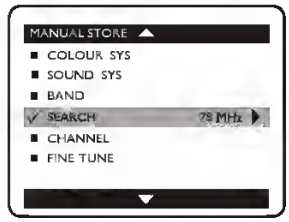 |
| 10 | < or > | **NOTE:** If you want to continue searching for another transmitting channel, repeat steps 6 to 9. | 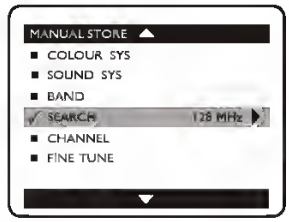 |
| 11 | MENU | Exit menu from screen. | |







***NOTE:** Screen displays may look different in certain models.

# QUARTZ ANALOG CHRONOGRAPHS 1/1 OF A SECOND – TYPE E

***with small chronograph minutes/seconds counters and 24-hour hand, and date***

***Includes Formula Italia S (SF 204.1) and RedRev Evo (SF 162.1, 162.2) quartz chronograph models***

**Figure A**

Legend

1, 2, 3 – Crown positions

Button **A** – Start/Stop
Button **B** – Reset

**H** – Hour Hand
M – Minute Hand
**S** – Normal Seconds Hand
**C** – Chronograph Seconds Counter
**E** – Chronograph Minutes Counter
**F** – 24-Hour Hand
**D** – Date Display

These chronograph models feature a minute counter (up to 30), seconds counter, small 24-hour hand, and date display. They can be used to time an event up to 29 minutes and 59 seconds in duration to the nearest second.

**Battery end-of-life indicator:**
When the battery is almost exhausted, Seconds hand **S** will start to move haltingly in two-second intervals, signaling the need to have the battery replaced as soon as possible. When this happens, the watch will still keep accurate time, however the stopwatch will not operate. If battery end-of-life indication begins while a chronograph measurement is being taken, the timing will stop, and the chronograph hands will reset at their zero position.

**To set the TIME and DATE:**
NOTE: Before setting the time, make sure chronograph measurement is stopped and both chronograph hands have been returned to zero position at 12 o'clock.

1. Pull crown out to position 2.
2. Turn crown counterclockwise until previous day's date appears in Display **D**

NOTE: Do not set date when the time is between 9:00 PM and 1:00 AM, otherwise the date may not change automatically on the following day.

3. The instant Seconds hand **S** reaches the 12 o'clock position, pull crown out to position 3; watch stops.

NOTES: If the crown is pulled out to position 3 while the chronograph is running, the stopwatch function will stop automatically, and the hands will reset to zero. When crown is in position 3, it may be turned clockwise or counterclockwise to move Hour **H** and Minute M hands in either direction.

4. Turn crown clockwise advancing Hour **H** and Minute M hands past 12:00 midnight to advance Date **D** to current date; then continue turning crown clockwise to set Hour **H**, Minute M and 24-Hour **F** hands to desired time, taking AM/PM time into account.

NOTES: 24-hour hand **F** will move in sync with Hour hand **H**, so when setting the hour, make sure 24-hour time is set properly.
RECOMMENDATION: When setting Minute hand M, first advance it 4 to 5 minutes ahead of desired time, then turn it back to the exact minute.

5. Take an accurate time signal (from a radio news station, for example). When the audible tone signals the exact time, push crown back in to position 1; watch will restart, now set to the exact time.

**To RESET Chronograph Hands:**
Before setting the time or running the stopwatch, make sure chronograph counter hands **C** and **E** are in the zero position at 12 o'clock. Follow these steps as needed to reset the counter hands following a battery change or in the event of an error.

1. Pull crown out to position 3.

NOTE: If the chronograph is running or has been stopped while running, when the crown is pulled out to position 3, the stopwatch hands will be automatically reset.

2. Press Button **A** to move stopwatch hands **C** and **E** clockwise.
3. Press Button **B** to move stopwatch hands **C** and **E** counterclockwise.

NOTES: To move the hands quickly in desired direction, press and hold Button **A** or Button **B**. Minute hand **E** is synchronized automatically with Seconds hand **C**. To reset hand **E**, continue to move hand **C** until hand **E** reaches the zero position.

4. Once Chronograph hands **C** and **E** have been reset to zero position, push crown back into position 1.

**Operating the CHRONOGRAPH**
This stopwatch is able to measure and display time in 1 second increments up to a maximum of 29 minutes/59 seconds. It will stop automatically after running continuously for 30 minutes. Measured time is indicated by Chronograph Minute **E** and Seconds **C** hands which move independently of the center-mounted and 24-hour watch hands.

**Simple chronograph functions:**

1. Press button **A** to start chronograph.
2. Press button **A** a second time to stop chronograph.
3. Press button **B** to reset chronograph to zero.

**Accumulated time functions:**
To measure the combined time of a series of shorter events, for example the actual playing time of a basketball game, where play is repeatedly interrupted.

1. Press button **A** to start chronograph.
2. Press button **A** a second time to stop chronograph and read elapsed time.

SCUDERIA FERRARI

Downloaded from www.Manualslib.com manuals search engine

## Loading cutlery

**Warning**: Sharp knives and other items of cutlery with sharp edges must be laid in the cutlery rack or in the upper basket to avoid the risk of injury.

To ensure that all items of cutlery in the cutlery basket can be reached by the water, you should:

1. Place the grid insert on the cutlery basket

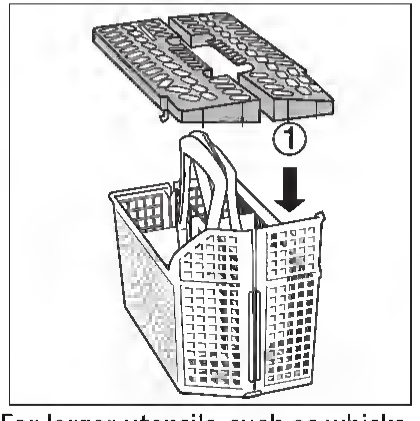


2. Place forks and spoons in the cutlery basket's grid insert with their handles pointing downwards.

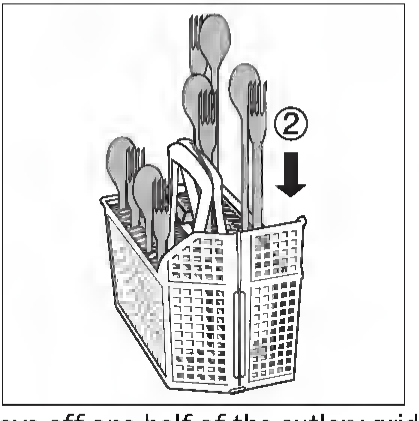


For larger utensils, such as whisks, leave off one half of the cutlery grid.

The cutlery basket can be opened out.

Always make sure that you put your hand around both parts of the two-part handle when removing it from the dishwasher.

1. Place the cutlery basket on a table or work surface.
2. Open out the two-part handle.
3. Remove cutlery.

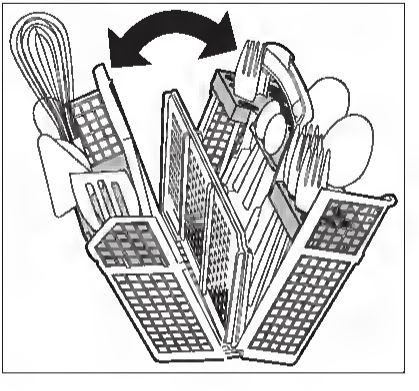

# Optional extras

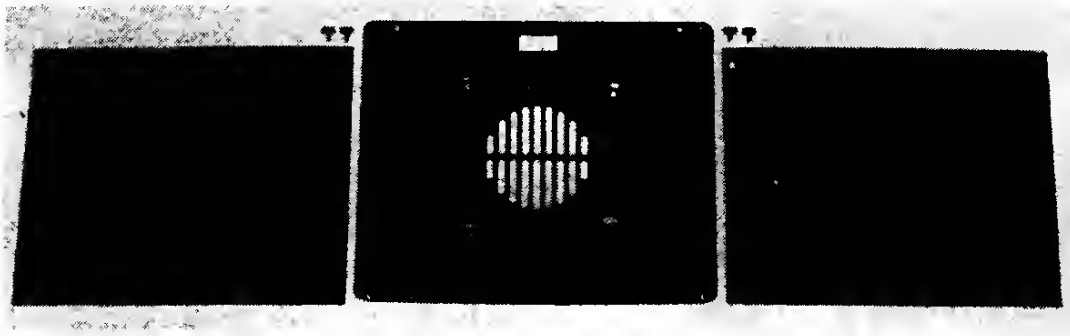

**Optional catalytic set KS 9**
**E-No. 611 899 405**

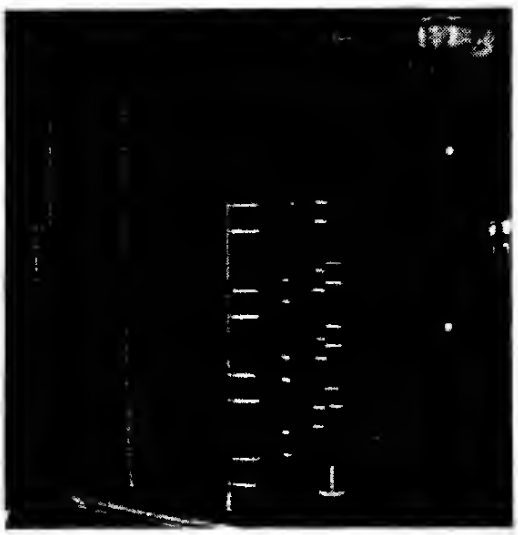

An optional catalytic set is available consisting of two side panels and one rear panel which replaces the existing one.

The two catalytic side panels are fastened (as illustrated) behind the shelf supports with two nuts each side. Make sure that the catalytic coating faces the interior of the oven.

These liners help to keep the oven cleaner as they clean themselves to a great extent during roasting and baking at temperatures above 200 °C.

As cleaning may be improved by exposure to a higher temperature it may be necessary to run the oven at 250 °C for 1 or 2 hours per week. Before carrying out such a heat cycle remove all oven equipment and make sure that you have cleaned the unlined surfaces to prevent any soil from baking on.

For isolated stubborn stains use a soft brush and very hot soapy water. Never use abrasive cleaners or scouring powders.

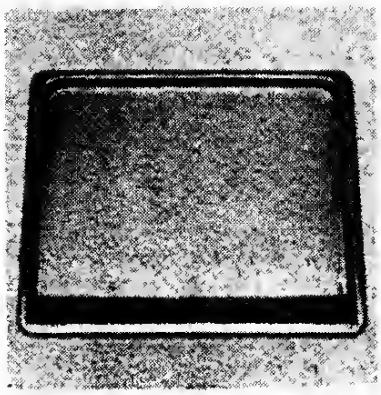

**Baking sheets**
**E-No. 611 899 359**

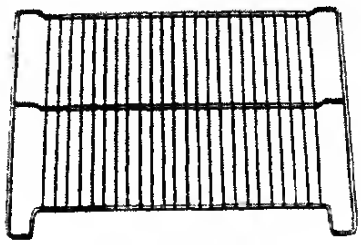

**Reversible wire shelf**
**E-No. 611 899 360**



Downloaded from www.Manualslib.com manuals search engine

4. Click Next to continue.

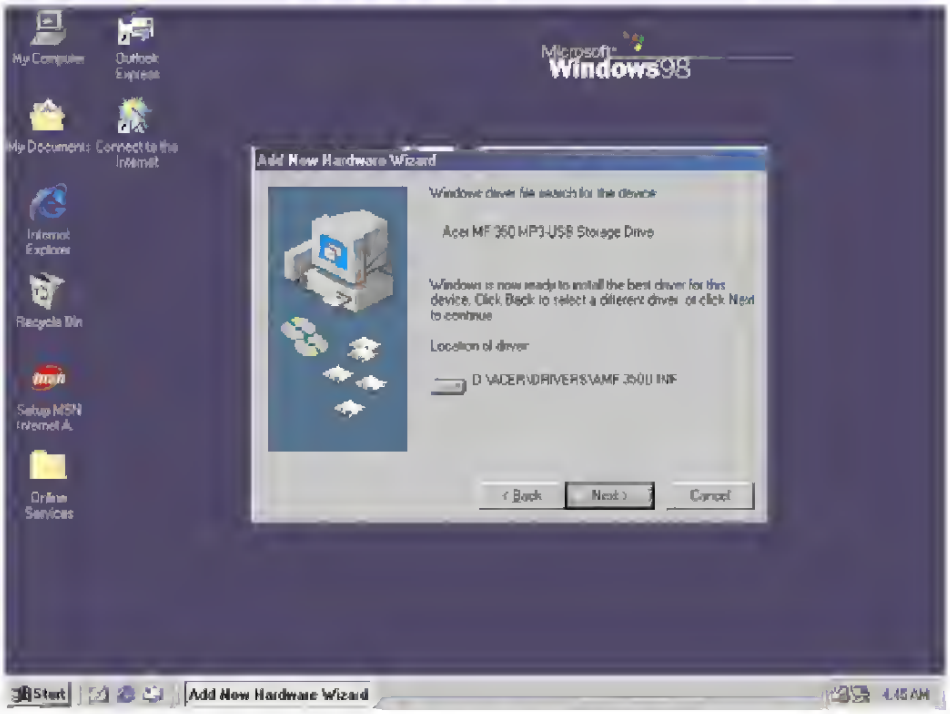


5. Click Finish, and the driver is installed successful.

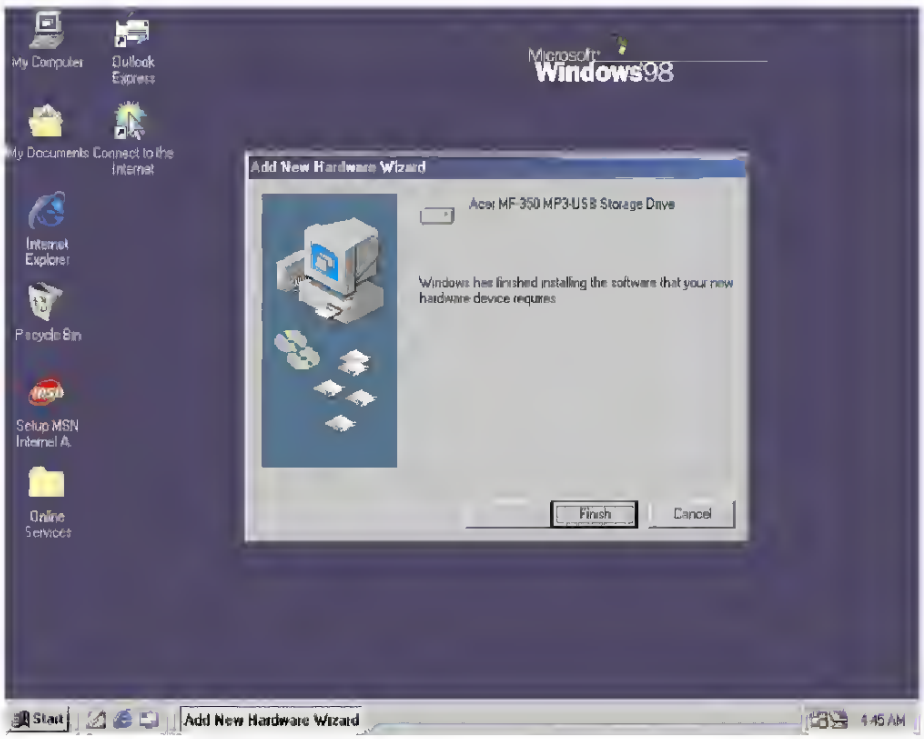




Downloaded from www.Manualslib.com manuals search engine

## Processors and System Memory

- Pentium III processor with integrated 256-KB Cache Single Processor capability
- ECC for memory error detection and correction
- 64-MB, PC133-MHz ECC registered SDRAM DIMM system memory, expandable to 2 GB
- Support for 64-MB, 128-MB, 256-MB, or 512-MB, PC133-MHz ECC registered SDRAM DIMMs
- Supports up to four registered SDRAM DIMMs (PC133-MHz ECC), installed one at a time in any order

## Expansion Slots

- Six expansion slots (five available): four 32-bit PCI slots (three available) and two 64-bit PCI slots
- PCI bus provides peripheral transactions at a bus clock speed of 33 MHz

## Disk Controller

- Integrated Single-Channel Ultra2 SCSI Controller on the PCI local bus. The controller provides an internal SCSI bus.
- Optional controller boards for controller duplexing or expanding storage capacity are available.

## Network Controller

- Integrated PCI 10/100 Wake-On-LAN NIC

## Ports/Connectors

- Serial (2)
- Parallel
- Keyboard
- Mouse

Downloaded from www.Manualslib.com manuals search engine

Weight in kg
Weight in lb

Any product or assembly marked with these symbols indicates that the component exceeds the recommended weight for one individual to handle safely.

# Preparation Procedures

Before beginning to remove any serviceable parts, determine whether the part is hot-pluggable or non-hot-pluggable.

### Hot-Pluggable Devices

Hot-pluggable devices in the ProLiant ML370 Servers include SCSI hard drives and power supplies (with redundant power supply option kit).

**IMPORTANT:** It is not necessary to turn off the server to replace hot-plug devices when they are not in active use.

### Non-Hot-Pluggable Devices

If the part is non-hot-pluggable, the server must be powered down. Non-hot-pluggable parts include the processors, all boards, DIMMs, fans, drive cages, and the standard power supply.

## Powering Down the Server

System power in ProLiant ML370 Servers does not completely shut off with the front panel Power On/Standby switch. The switch toggles between On and Standby, rather than On and Off. The standby position removes power from most electronics and the drives, but portions of tbe hot-plug power supply and some internal circuitry remain active. To completely remove all power from the system, you must disconnect all power cords from the server.

**WARNING:** To reduce the risk of injury from electric shock, remove all power cords to completely disconnect power from the system.

**WARNING:** To reduce the risk of personal injury or damage to the equipment, ensure that only one component is extended at a time. A rack may become unstable if more than one component is extended for any reason.

**WARNING:** Because the rack allows you to stack computer components on a vertical rather than horizontal plane, you must take precautions to provide for rack stability and safety. It is important that you follow these precautions to provide for rack stability and safety and to protect both personnel and property. Heed all cautions and warnings throughout the installation instructions that came with the server.

Downloaded from www.Manualslib.com manuals search engine

## *Electrical Plug Connection*

### Three-Wire Plug

**NOTE: The power cord (pigtail) is NOT supplied with the electric dryer. Type of pigtail and gauge of wire must conform to local codes and instructions.**

**The method of wiring the dryer is optional and subject to local code requirements.**

**NOTE: Connect the dryer to the power supply with the MAXIMUM RATED VOLTAGE listed on the nameplate.**

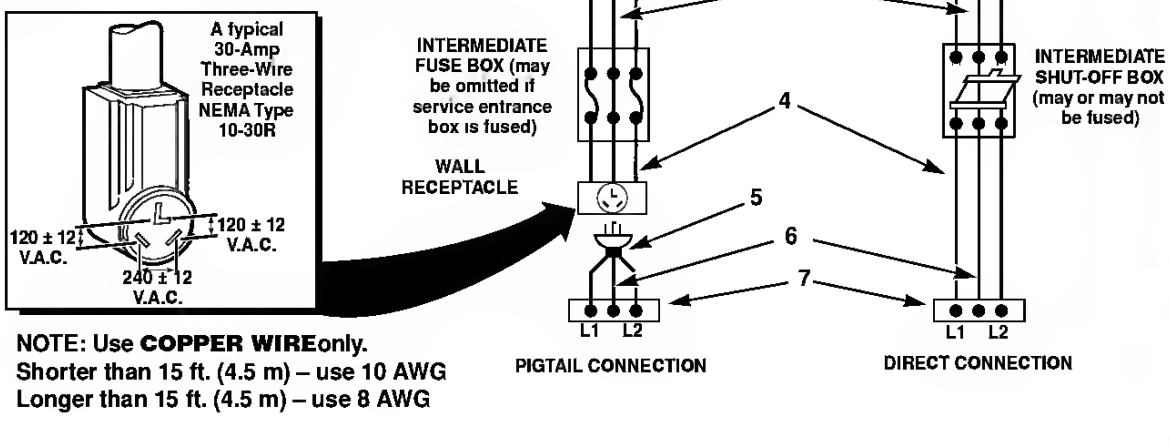


**NOTE: Use COPPER WIRE only.**
**Shorter than 15 ft. (4.5 m) – use 10 AWG**
**Longer than 15 ft. (4.5 m) – use 8 AWG**

| | | | |
|---|---|---|---|
| 1 | 3 Wire Grounded Neutral 120/240 Volt, 60 Hertz AC 1 Phase Service Entrance Switch Box (Refer to NOTE above) | 4 | Metallic or Non-Metallic Sheathed Cable (**Copper Wire Only**) |
| 2 | 30 Ampere Fuses or Circuit Breaker | 5 | Pigtail to Dryer (Refer to NOTE above) |
| 3 | Neutral Wire | 6 | Neutral |
| | | 7 | Terminal Block in Dryer |

Figure 14

1. Remove access cover from rear of dryer.

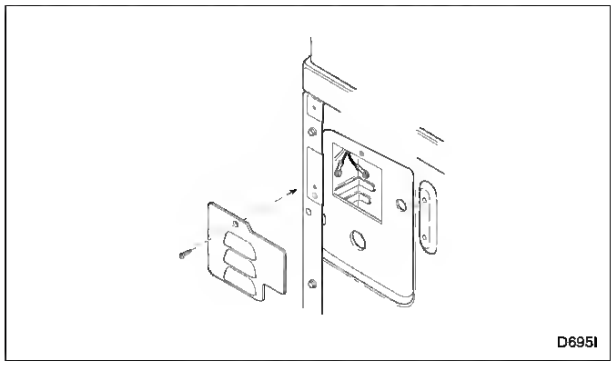


Figure 15

2. Use a strain relief and insert end of power cord through power supply hole.

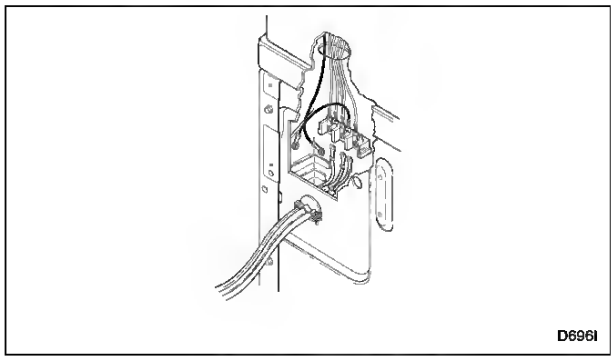


Figure 16


© Copyright, Alliance Laundry Systems LLC – DO NOT COPY or TRANSMIT

## 5

**Within 30 seconds, press the Number buttons to enter the two-digit code for your Cable Box/DBS.** For example, if you have a Zenith Cable Box, press Number buttons 0, 7.

## 6

**Repeat step 1.** If the remote control works your Cable Box/DBS, you're finished. If the remote control still doesn't work your Cable Box/DBS, repeat steps 2-5, using a different code for your brand, if available.

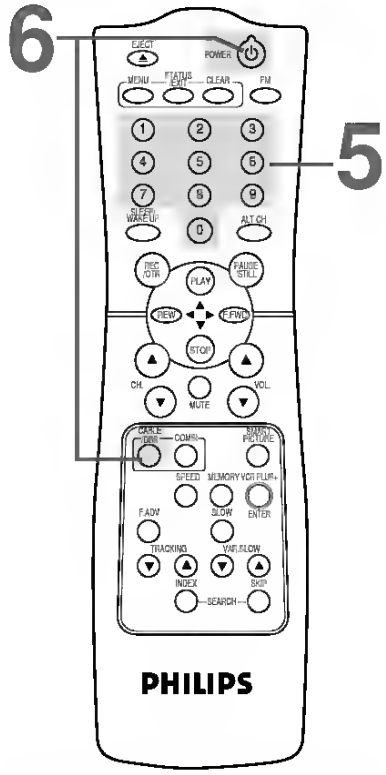


**There is no guarantee that the remote control will work your Cable Box or DBS.**

### Helpful Hints

- Although the remote control that comes with your TV/VCR will work most Cable Boxes and DBSs, it is possible that the remote control will not operate your Cable Box or DBS
- The remote control may only operate some features of your Cable Box or DBS. For example, some Cable Boxes may only be turned on at the Cable Box. Therefore, the remote control will not turn on the Cable Box.
- Press the CABLE/DBS button before pressing any buttons to operate the Cable Box/DBS.
- If you had to program the remote control to operate your Cable Box or DBS here, whenever you replace the batteries in the remote control, you will have to program the remote control again. Write down the code you used for future reference.

Downloaded from www.Manualslib.com manuals search engine

# TOWING YOUR AIRSTREAM

**SUGGESTED PRE-TRAVEL CHECK LIST**

**Interior**

1. Turn off water pump switch
2. Check battery water level
3. Close windows and vents
4. Lock all interior cabinet doors
5. Latch refrigerator door (Seal containers first)
6. Hold down or stack securely all loose, hard and sharp objects
7. Fasten sliding and foldette doors
8. Drain toilet bowl,
9. Turn off interior lights
10. Set table in upright position
11. Pull up or retract step
12. Lower blinds
13. Secure and lock main door

**Exterior**

1. Disconnect and stow the electrical hookup cord, the sewer hookup hose (flush out), and the water hookup hose
2. Turn off gas at LP tanks
3. Retract stabilizing jacks
4. Check Hitch: It must be properly attached
5. Check safety chains and breakaway switch cable
6. Fully retract jack. Remove and stow jack stand or wood block.
7. Check clearance and stoplights
8. Check lug nuts
9. Check tires for correct pressure
10. Check that TV antenna is properly stowed
11. Adjust tow vehicle mirrors
12. Pull forward some 50 ft, test brakes, and check site for forgotten objects and cleanliness.

**NOTICE! CHECK WHEEL LUGS**

**On first trip, tighten wheel lugs at start and at 10, 25, and 100 miles. Torque aluminum wheels to 110-120 ft. lbs. and steel wheels to 95 ft. lbs. There after, check wheel lugs before each trip, after excessive braking, and following winter storage.**

**Home**

1. Leave house key with your neighbors
2. Valuables and important papers should be stored in a safe place
3. Newspaper, milk and other deliveries should be discontinued
4. Ask the Post Office to hold your mail for you
5. Arrange with the telephone company for discontinued or "vacation service"
6. Arrange care for your pets
7. Your lawn, garden and houseplants should be cared for
8. Lock all windows and doors securely. Keep shades open for a lived in look
9. Cover all food to keep out mice and insects
10. Eliminate all fire hazards. Place matches in a tin box or glass jar
11. Store oil, gasoline and other flammables properly
12. Destroy all newspapers, magazines and oily rags.
13. Notify police



Downloaded from www.Manualslib.com manuals search engine

## Predictive text or auto correction

**Note**
*Predictive text and auto correction not supported in all APPs.*

The Google keyboard can provide predictive text input. As you tap the letters of a word, a selection of words are displayed above the keyboard that continue the sequence of letters tapped, or are a close match allowing for errors. The word list changes after every key press. If the word you need is displayed, you can tap on it to insert it into your text.

To turn predictive text on or off with the Google keyboard, open the **Application** menu and tap **Settings**. Tap **Language & input** and under *Keyboard & input methods*, tap **Google Keyboard** > **Text correction**. Tap **Show correction suggestions** to toggle this feature on or off. In addition, tap **Auto correction** and select one of the options to set the keyboard's auto correction level.

# Editing text

You can select and edit text in certain APPs, such as text you have entered in a text field. Selected text can be cut or copied and later pasted within the same application, or to a different application.

**Note**
*Certain APPs may not support text selection, or only support it in certain areas. Other APPs may offer specialized commands to select text.*

## Selecting text

To select text that you want to cut, copy, delete or replace:

1. Tap the text you want to select. If you can select this text, a cursor is inserted below the text.
2. Tap and hold the text or word you want to select. The selected text is highlighted, with a tab at each end of the selection.
3. Drag either tab to expand or reduce the amount of selected text, or tap **SELECT ALL**.
4. To cut or copy the text, tap the **CUT** or **COPY** button.

Downloaded from www.Manualslib.com manuals search engine

## Cleaning the appliance

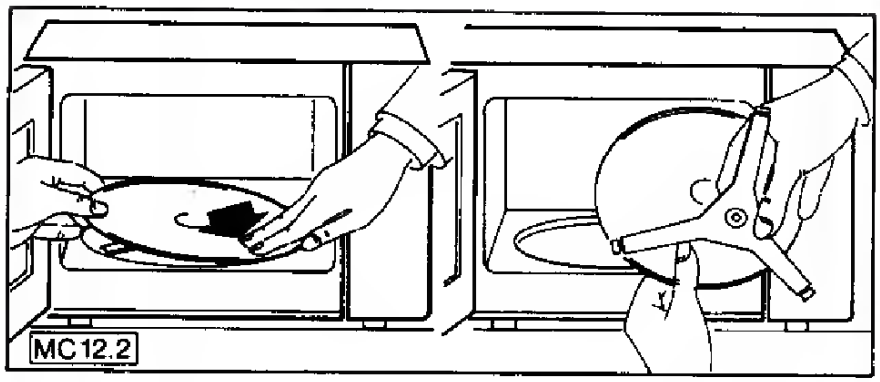


Cleaning should only be carried out when the appliance is unplugged from the mains supply.
Use only mild cleaners i. e. washing-up liquid and hot water.
Clean your appliance inside and outside with a soft cloth. Never use abrasive scouring agents.
You can neutralize odours inside the cooking space by boiling a cup of water with a little lemon juice for a few minutes in your oven.

## Removing and reinserting the wire racks

To clean the side-walls of the micro-wave, the wire racks can be removed as follows:

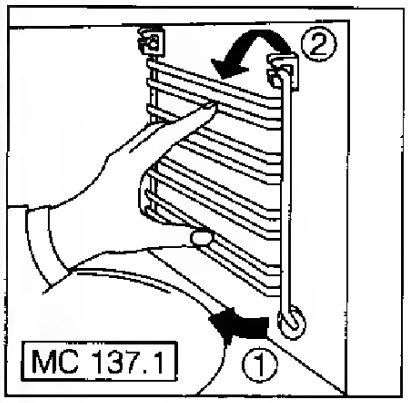


Pull the rack upwards and lift it out sideways and downwards out of its holder.
It can be placed back in position by following this procedure in reverse.



MCRP600-2 08/93 GB – MCRP603-1 10/93 GB

Downloaded from www.Manualslib.com manuals search engine

verfpi-0.book Page 15 Thursday, October 19, 2000 1:51 PM



| Label | Icon | Color | Component |
|---|---|---|---|
| 9 | | | Handset/telephone line ports (optional) |
| 10 | | | Expansion slot |
| 11 | | Burgundy | Parallel/Printer port |

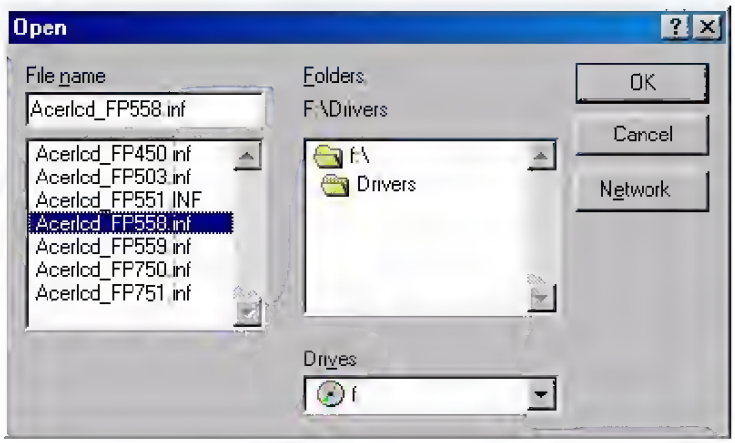


10. Back to "**Install From disk**" and click "**OK**". The dialogue box "**Update Device Driver Wizard**" appears. Choose the model from the list, then click "**Next**".

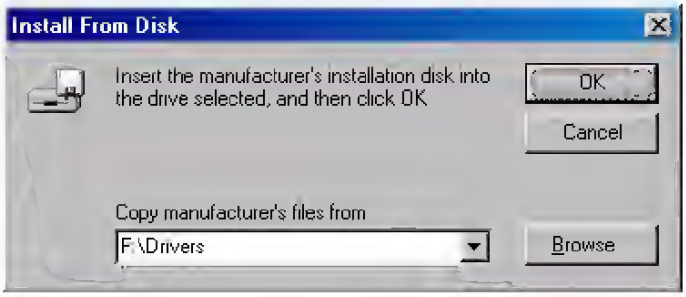


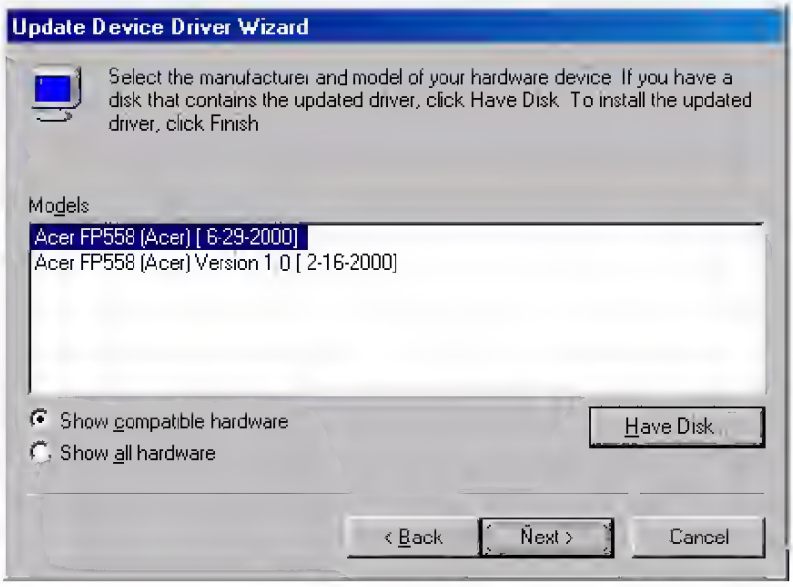




Downloaded from www.Manualslib.com manuals search engine

# NOTEBOOK FUNCTION

**How to utilize notebook function:**

If you want to display the message when the TV is turned on:

| Step | Press button | | Result on screen |
|---|---|---|---|
| 1 | C+ / C- <br> V- / V+ | Move the cursor to select the sign ✉. | 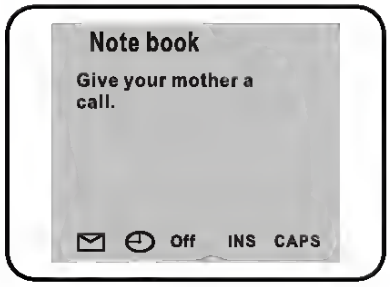  |
| 2 | OK | Press button to turn ✉ into ✉ as shown. | |

If you want to display the message at a specified time:

| Step | Press button | | Result on screen |
|---|---|---|---|
| 1 | C+ / C- <br> V- / V+ | Move the cursor to select the sign ⏲. | 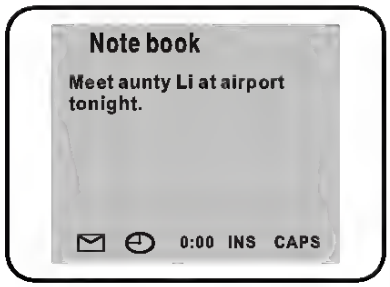  |
| 2 | OK | Press button to turn Off into 0:00. | |
| 3 | C+ / C- | Set your desired time, e.g. 17:40. | 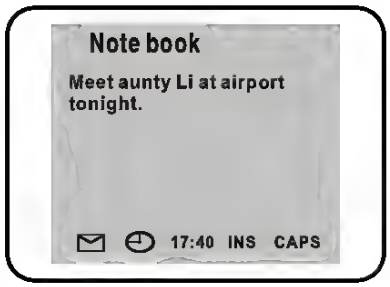  |

**Notes:**

- The time setting in notebook must be based on the time set in **Time** of TIMER menu. The time set in notebook must be later than the time set in **Time**.



Downloaded from www.Manualslib.com manuals search engine

Use the **ATM CONFIG** menu (Figure 7) to set the parameters listed below the figure.

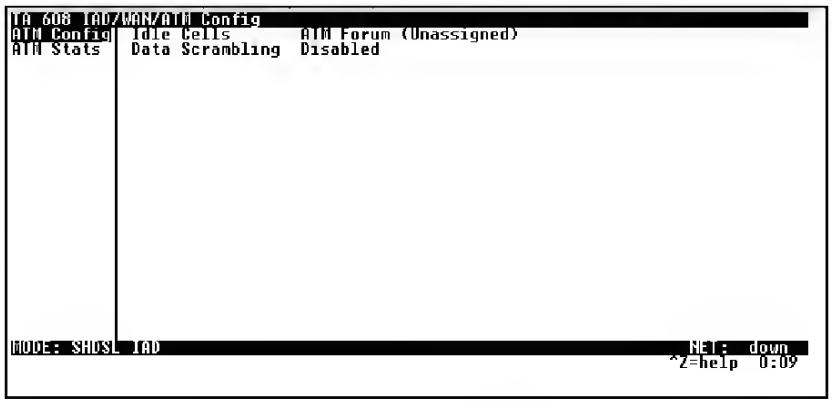


**Figure 7. ATM Config Menu**

### Idle Cells

The **IDLE CELLS** format must be configured for either **ATM FORUM** or **ITU**. Configuring this setting incorrectly for a particular circuit will cause poor performance at the ATM layer.

NOTE *This setting must match the configuration setting of the ATM switch or DSLAM at the other end of the circuit.*

### Data Scrambling

**DATA SCRAMBLING** can be **ENABLED** or **DISABLED** for cell traffic. Configuring this setting incorrectly for a particular circuit will cause poor performance.

NOTE *This setting must match the configuration setting of the ATM switch or DSLAM at the other end of the circuit.*

## >ATM Stats

Use the **WAN** menu (Figure 6 on page 27) to access the **ATM STATS** menu (Figure 8) and view the parameters listed below the figure.


© 2002, ADTRAN, Inc

Downloaded from www.Manualslib.com manuals search engine

# Baking Table

## Baking on one shelf position

| Type of cake or pastry | Pizza & baking | | Conventional | | Time |
|---|---|---|---|---|---|
| | Shelf position from bottom | Temperature °C | Shelf position from bottom | Temperature °C | For both functions Hrs.: Mins. |
| **Cakes in cake tins** | | | | | |
| Ring-shaped or bowl-shaped cakes | 1 | **150**-160 | 1 | 160-180 | 0:50-1:10 |
| Madeira cake/ king cake | 1 | **140**-160 | 1 | 150-170 | 1:10-1:30 |
| Sponge cake | 1 | **150**-160 | 1 | 160-180 | 0:25-0:40 |
| Shortcrust pastry flan base | 3 | **170**-180 | 2 | 190-210[1] | 0:10-0:25 |
| Sponge flan base | 3 | **150**-170 | 2 | 170-190 | 0:20-0:25 |
| Covered apple flan | 1 | 150-170 | 1 | **170**-190 | 0:50-1:00 |
| Savoury flan (e.g., quiche lorraine) | 1 | **160**-180 | 1 | 190-210 | 0:30-1:10 |
| Cheesecake | 1 | 140-160 | 1 | **170**-190 | 1:00-1:30 |
| **Cakes and pastries on baking trays** | | | | | |
| Plaited roll/ring | 3 | 160-170 | 3 | **170**-190 | 0:30-0:40 |
| Fruit loaf | 3 | 150-170[1] | 3 | **160**-180[1] | 0:40-1:00 |
| Bread (rye bread) initially .....then | 1 | 180-200[1] 140-160 | 2 | **250**[1] **160**-180 | 0:20 0:30-1:00 |
| Cream puffs/eclairs | 3 | **160**-170[1] | 3 | 190-210 | 0:15-0:30 |
| Swiss roll | 3 | 150-170[1] | 3 | **180**-200[1] | 0:10-0:20 |
| Dry streusel cake | 3 | **150**-160 | 3 | 160-180 | 0:20-0:40 |
| Butter cake/sugar cake | 3 | 160-170[1] | 3 | **190**-210[1] | 0:15-0:30 |



Downloaded from www.Manualslib.com manuals search engine

## REPRODUCCION DE LA CINTA

Presione los siguientes botones para controlar el movimiento de la cinta.

| Para | Presione este botón |
|---|---|
| Expulsar la cassette | ⏏ |
| Cambiar el lado a reproducir<br>Parar el avance rápido o rebobinado y seguir reproduciendo | DIR |
| Avanzar rápidamente uno de los lados de la cinta | FF ▲ |
| Rebobinar uno de los lados de la cinta | ▼ REW |
| Parar la cinta y desconectar el aparato | MUTE (durante más de 2 segundos) |

- Al final de la cinta en el modo de avance rápido empezará a reproducir automáticamente el otro lado de la cinta.
- Al final de la cinta en el modo de rebobinado empezará a reproducir automáticamente el mismo lado de la cinta.

### Indicaciones de sentido

| | |
|---|---|
| FWD | Se enciende cuando se reproduce el lado superior de la cassette. |
| REV | Se enciende cuando se reproduce el lado inferior de la cassette. |

### Indicaciones de movimiento de la cinta

Cuando empieza reproducir la cinta, el indicador de movimiento de la cinta muestra el sentido de la cinta.

| | |
|---|---|
| Lado superior:<br>Durante la reproducción, avance rápido<br>Lado inferior:<br>Durante el rebobinado | |
| Lado inferior:<br>Durante la reproducción, avance rápido<br>Lado superior:<br>Durante el rebobinado | |

Durante el avance rápido o rebobinado, la indicación de transporte de cinta es más rápida.

### Antes de girar la llave de encendido a OFF

No se olvide de expulsar la cassette del aparato antes de girar la llave de encendido a OFF.

### Conmutación de modos

Si el aparato está en el modo de radio o de reproducción con cambiador de discos compactos, cuando se coloca una cassette se conmuta automáticamente al modo de reproducción de cinta.

### Para evitar problemas con la cinta

Antes de colocar una cassette en el aparato, verifique que no haya flojedad en la cinta. En el caso de que fuera necesario, tense la cinta introduciendo un lápiz en el orificio de bobinado y elimine la flojedad.

Las cintas de 90 minutos o más largas son muy finas y pueden deformarse o dañarse muy fácilmente. No se recomienda su uso.

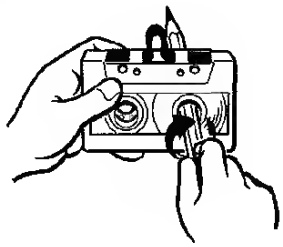

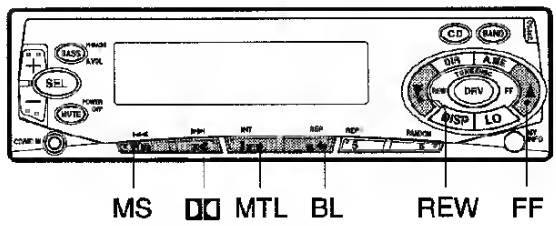


### Reproducción de cintas grabadas con la reducción de ruidos Dolby B

Presione DOLBY (botón de reducción de ruidos Dolby) cuando se reproduce una cinta grabada en este modo. Se enciende el indicador "DOLBY B".

Presione nuevamente este botón para cancelar el modo.

### Nota

Si se reproduce una cinta grabada sin la reducción de ruidos Dolby B utilizando el sistema Dolby B NR, el sonido no se reproducirá correctamente.

### Reproducción de cintas de metal

Presione MTL (metal) cuando se reproduce una cinta de metal o $CrO_2$. Se enciende el indicador "MTL".

Presione nuevamente este botón para cancelar este modo.



Downloaded from www.Manualslib.com manuals search engine

## Adding speakers

Your Lifestyle® 12 system provides high quality audio for a single listening area. However, your music center also provides connections (SPEAKERS A or SPEAKERS B) for adding a pair of powered speakers in a second room. In the second room, you can listen to the sound source that is playing in the main room.

You can purchase an additional remote control to keep in the second room.

Keep the following considerations in mind if you choose to connect secondary speakers.

*Using speakers connected to the B outputs:*

- You must use a second remote control, set to B (see instructions below), to turn on the B speakers.
- Adjusting volume with this second remote adjusts volume for only the B speakers.
- Using the mute key on the second remote mutes or unmutes the second room speakers.

*Using speakers connected to the A outputs:*

- The music center controls operate speakers connected to FIXED and A outputs.
- Adjusting volume from the music center control panel or with the remote control that came with the system adjusts volume for speakers connected to FIXED and A outputs.
- Using the mute key on the main remote mutes or unmutes speakers connected to FIXED and A outputs.

### Setting a second remote for additional speakers

You need a second remote control, set to B, to operate speakers connected to the SPEAKERS B outputs. When you purchase a second remote control, it is shipped set to A, to control your main speakers. It will also control secondary speakers connected to SPEAKERS A.

To set your second remote to control speakers connected to B, follow these steps:

1. Open the remote control battery cover.
2. Locate miniature switch 5. Slide the switch down (Figure 22).
3. Locate miniature switch 6. Slide the switch up (Figure 22).
4. Make sure that the house code switches match those on your first remote (see page 28).
5. Replace the battery cover on the remote control.

♪ **Note:** *Switches 7 and 8 are not for current system use.*

**Figure 22**

*Speaker code switch settings*

Set to SPEAKERS A

Set to SPEAKERS B



Downloaded from www.Manualslib.com manuals search engine

Each of these options will be explained in detail below.

### Record Time

The Record Time option enables you to set the time and date on the Player.

1. Enter the System mode (as outlined above).
2. Using the NEXT (or PREV) button, scroll through the System Menu until "Record Time" appears in the OLED screen.
3. Press the MODE button *briefly once* to confirm your selection and enter the Record Time screen (see example below).

4. Press the PLAY button in order to edit the date and time.
   *The YEAR will start flashing.*
5. Use the NEXT (or PREV) button to scroll to the desired number.
6. When the correct number is reached, press the PLAY button in order to edit the next part of the date.
7. Continue this process (steps 4-6) until all parts of the date and time are correct.
8. Then, press the MODE button to confirm the new date and time setting and return to the System Menu.

### Backlight

Use the Backlight option ( ) to specify a fixed time after which, provided there has been no operation of buttons/keys, the backlight in the OLED screen will go out (screen will go blank and a moving screensaver will appear).

1. Enter the System mode (as outlined above).
2. Using the NEXT (or PREV) button, scroll through the System Menu until "Backlight" appears in the OLED screen.
3. Press the MODE button briefly once to confirm your selection.
   *A Backlight level indicator will appear in the OLED screen.*
4. Use the NEXT (or PREV) button to increase/decrease the number, which indicates the amount of time (in seconds) that the Backlight should remain lit before going into screensaver mode.
5. When the desired number is reached, press the MODE button *briefly once* to confirm your selection and return to the System Menu.



Downloaded from www.Manualslib.com manuals search engine

- Check the rear door for dents, scratches, proper fit when its closed, and operation.

**Cabinet Interior Checklist**: Open the rear door and inspect the inside of the cabinet:

- Inspect all cables, make sure they are secure.
- Inspect all rails for signs of damage.
- Check all mounting screws for tightness.
- Check all components for signs of shifting during shipment or any signs of damage.

**NOTE** If the shipment is incomplete, or if the equipment is damaged or fails to meet specifications, notify the nearest Hewlett-Packard Sales and Support Office. If damage occurred in transit, notify the carrier as well. Hewlett-Packard will arrange for replacement or repair without waiting for settlement of claims against the carrier. If the shipment was damaged in transit, keep the shipping containers and packaging material for inspection.

If extensive damage is found, it may be necessary to return the entire cabinet to HP. Refer to the Repacking instructions.

### Cabinet Installation

Installation of a factory-loaded cabinet consists of the following steps:

**Step 1.** Move the cabinet to installation site.

**Step 2.** Lower the leveling feet. (This will prevent excessive wear on the casters.)

**CAUTION** Extend the cabinet stabilizers, located at the bottom of the front of the cabinet, as an additional safeguard against overturning the cabinet during installation. Failure to observe this precaution could result in personal injury or equipment damage.

**Step 3.** Connect the console and system peripherals to the server.

For information about connecting external devices, refer to External Connections at the end of this section.

**NOTE** Attaching cables while the rails are extended fully forward will ensure that sufficient slack is available for later maintenance.

**Step 4.** Connect the cabinet power cord to the appropriate wall outlet.

**NOTE** If the cabinet being installed contains a PowerTrust Uninterruptible Power Supply (UPS), perform the steps shown under the PowerTrust UPS OptionOption subsection.

**Step 5.** Be sure all peripherals outside the cabinet are connected to wall outlets.



Downloaded from www.Manualslib.com manuals search engine

## 1400 PICTURE TUBE PANEL

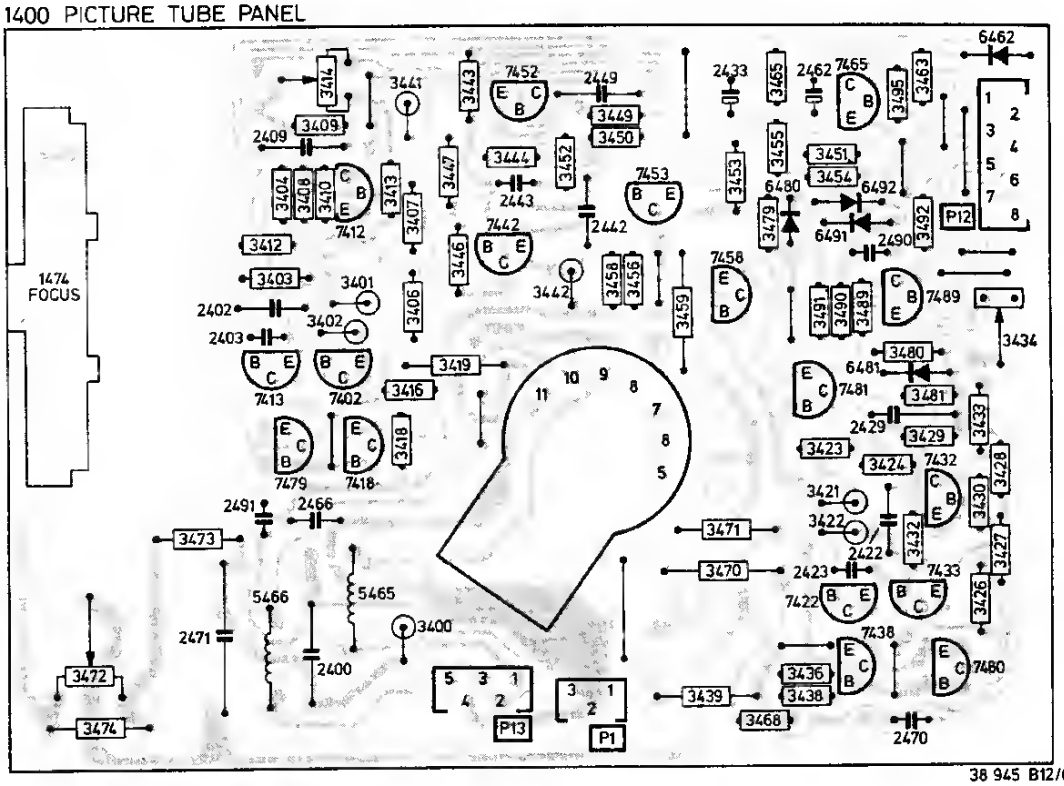


38 945 B12/619

## AUXILIARY PANEL NEAR SYNC IC 4822 212 22529

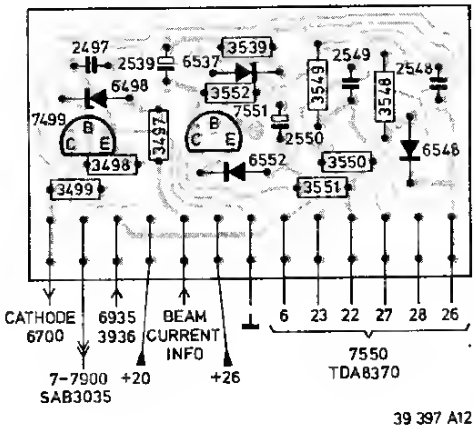


39 397 A12

## 1250 HEADPHONE PANEL

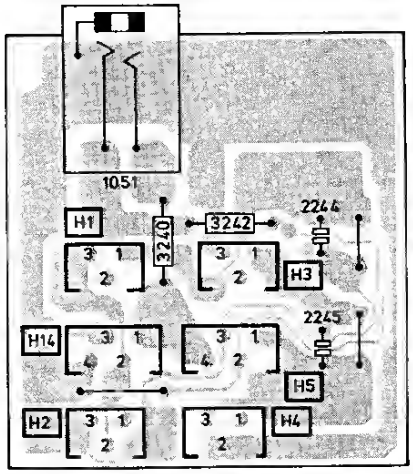


38 942 A7 (619)

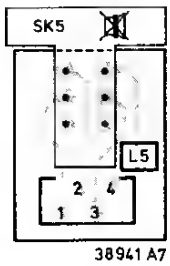


38 941 A7 (619)

For Service Manuals
MAURITRON SERVICES
8 Cherry Tree Road, Chinnor
Oxfordshire, OX9 4QY.
Tel (01844) 351694
Fax (01844) 352554
email - sales@mauritron.co.uk



Downloaded from www.Manualslib.com manuals search engine

To launch the HP Onboard Administrator task:

1. Select an Enclosure or a Health Collection from views such as Enclosure State view, Health Collection view or Enclosure Diagram view.
2. Click **HP Onboard Administrator.**
3. Log in to HP Onboard Administrator.

## HP Integrated Lights-Out task

Blade Servers in HP BladeSystem Enclosures include an Integrated Lights-Out management processor, which enables you to perform advanced, secure, and operating system-independent remote server management using a standard browser interface. The HP BladeSystem Management Pack 1.0 for System Center Essentials 2007 includes a task that collects HP Integrated Lights-Out management processor data and creates an associated browser link to remotely access the selected HP ProLiant Blade server.

To launch the HP Integrated Lights-Out task to display information:

1. Select a Device Bay from the Device Bay State view or by navigating to the desired bay using the Enclosure Diagram View.
2. Click **HP Integrated Lights-Out.**



Downloaded from www.Manualslib.com manuals search engine

# Trip Planning on Your Desktop

You can use CoPilot's desktop functions to map out routes and print maps and driving directions before getting on the road. Desktop trip planning is an additional feature of CoPilot that is in no way connected to using your Pocket PC for route guidance.

On the following pages you will find brief descriptions of CoPilot's desktop trip planning capabilities. For more detailed descriptions, open CoPilot Help from the desktop application (**Help** menu > **Help Contents and Search**, or click the **Help** button on the toolbar). Go to **Desktop Trip Planning** in the **Contents** tab.

To begin planning a trip on your desktop, click the **Planning** icon in the sidebar to the left of the map. Using the drop-down menus you can select from a number of planning features. Many of these features can also be accessed from the toolbar. Place your cursor on any toolbar button without clicking to see what it does.

## New Trip

**New Trip** button or *New Trip* in the **File** menu.

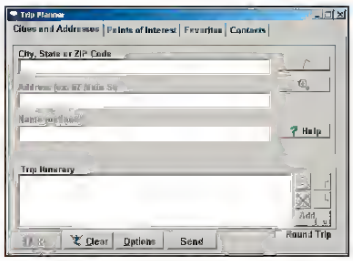

Opens the *Trip Planner* window where you can create a new trip, arrange the order of stops on your route, add or edit **Favorites** (these can be downloaded to your Pocket PC along with map data), search for **Points of Interest**, or use your **Contacts** database to add stops to your trip. Click **Run** to receive driving directions and a map.

## Run Trip

**Run Trip** button or *Run Trip* in the **Trip** menu.

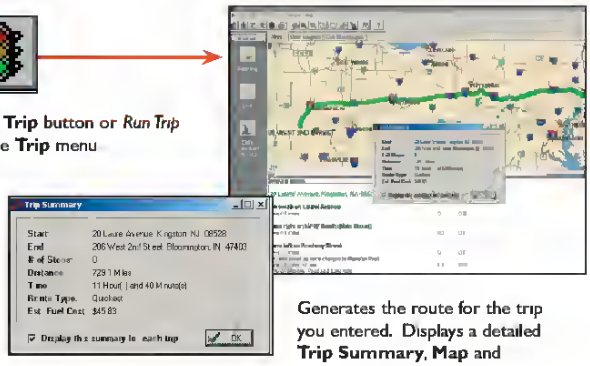

Generates the route for the trip you entered. Displays a detailed **Trip Summary**, **Map** and **Driving Directions**.

## Edit Trip

**Edit Trip** button or *Edit Trip* in the **Trip** menu.

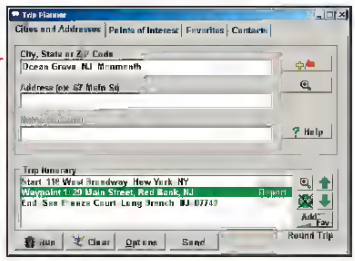

Takes you back to the *Trip Planner* window where you can edit stops on your existing trip or click **Clear** to delete all stops and begin a new trip.



Downloaded from www.Manualslib.com manuals search engine

## Problem: Image is reversed.

- Select "Image" from the OSD and adjust the projection direction. See page 22, 23.

## Problem: Lamp burns out or makes a popping sound

- When the lamp reaches its end of life, it will burn out and may make a loud popping sound. If this happens, the projector will not turn on until the lamp module has been replaced. To replace the lamp, follow the procedures in the "Replacing the Lamp". See page 36.

## Problem: LED lighting message

| Message | Power LED | Temp LED | Lamp LED |
|---|---|---|---|
| | Amber | | |
| Standby State (Input power cord) | Slow Flashing | ○ | ○ |
| Lamp lighting | ☼ | ○ | ○ |
| Power on | ☼ | ○ | ○ |
| Power off (Cooling) | Quick Flashing | ○ | ○ |
| Error (Lamp fail) | ○ | ○ | ☼ |
| Error (Thermal fail) | Flashing | ☼ | ○ |
| Error (Fan lock fail) | Flashing | Quick Flashing | ○ |
| Error (Over Temp.) | Flashing | ☼ | ○ |
| Error (Lamp Breakdown) | ○ | ○ | ☼ |

☼ =>Light On ○ =>Light Off



Downloaded from www.Manualslib.com manuals search engine

6. Slide the drive ❶ into the drive bay, then secure with two screws ❷ on either side of the drive compartment.

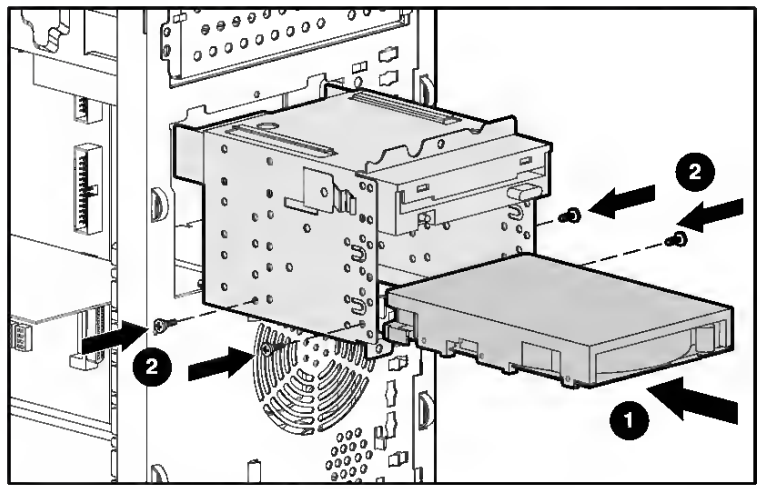


Figure 3-7. Installing a 3.5-inch hard drive

7. Slide the drive compartment back into the chassis.
8. Connect the power and data cables to the back of all devices.

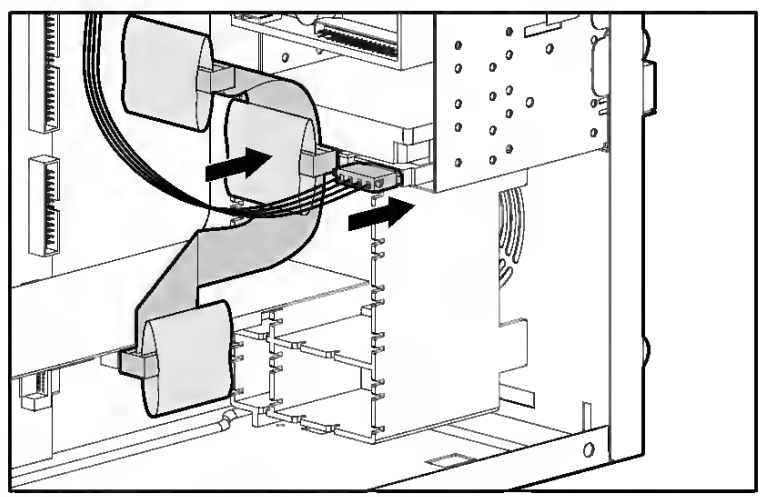

Figure 3-8. Connecting the hard drive cables

9. Replace the access panel and the front bezel.
10. Restore power to the server.

**NOTE:** Using a non-Ultra2 drive impacts SCSI bus performance.

Downloaded from www.Manualslib.com manuals search engine

# maintenance & service guide

## Presario 1600XL Series

### Model 1600T, 1600-XL140, 1600-XL141, 1600-XL142, 1600-XL143, 1600-XL144, 1600-XL146, 1600-XL147, 1600-XL150 XL156, XL157, XL255, XL256, XL257, and XL258

## Pin Assignments

This appendix provides connector pin assignment tables for Compaq Presario 1600XL Series Portable Notebooks. For more information on connectors, refer to the section on Rear Connectors.

**Note:** The signals in all tables of this appendix are considered active high unless otherwise indicated by an asterisk (*).

**Parallel Connector**

| Pin | Signal | Pin | Signal |
|---|---|---|---|
| 1 | Strobe* | 10 | Acknowledge* |
| 2 | Data Bit 0 | 11 | Busy |
| 3 | Data Bit 1 | 12 | Paper Out |
| 4 | Data Bit 2 | 13 | Select |
| 5 | Data Bit 3 | 14 | Auto Linefeed* |
| 6 | Data Bit 4 | 15 | Error* |
| 7 | Data Bit 5 | 16 | Initialize Printer* |
| 8 | Data Bit 6 | 17 | Select In* |
| 9 | Data Bit 7 | 18-25 | Signal Ground |

* = *Active low*



Downloaded from www.Manualslib.com manuals search engine

verfp-2.book Page 30 Tuesday, October 5, 1999 1:30 PM



# Turning on your computer

After connecting the necessary peripherals and plugging in the power cable, you are now ready to turn the computer on and get to work.

To turn on your computer:

1. Locate and turn on (1) the main power switch on the left panel of your computer.
2. On the front panel of your computer, press the power button.

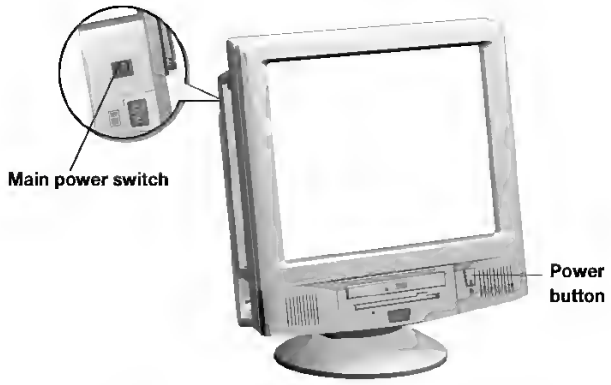


**Important:** Make sure that the power cable is properly plugged into an electrical outlet. If you are using a power strip or an AVR (Auto-Voltage Regulator), make sure that it is plugged in and turned on.

# GUARANTEE CONDITIONS

**Weitere Kundendienststellen im Ausland**
In diesen Ländern gelten die Garantiebedingungen der örtlichen Partner. Diese können dort eingesehen werden.

**Further after-sales service agencies overseas**
In these countries our AEG agents' own guarantee conditions are applicable. Please obtain further details direct.

**Autres agences étrangères assurant le service après-vente**
Dans ces pays, les conditions de garantie des concessionnaires de la région sont valables. Vous pouvez les consulter sur place.

**Otros puntos de Postventa en el extranjero**
En estos países rigen las condiciones de nuestros representantes locales. las cuales pueden ser consultadas allí mismo.

**Ulteriori uffici del servizio tecnico assistenza clienti all'estero**
In questi paesi sono valide le condizioni di garanzia dei partner locali. Queste condizioni possono essere esaminante sul luogo.

**Serviços de assistência técnica no estrangeiro**
Nestes países são válidas as condições de garantia dos concessionários locais, podendo aí ser consultadas.



Downloaded from www.Manualslib.com manuals search engine

# Телетекст

Телетекст представляет собой систему распространения информации, передаваемой по некоторым каналам, которую можно читать как газету. В этой системе предусмотрена также функция субтитров для людей, имеющих дефекты слуха или не знающих языка, на котором ведется передача (кабельные сети, каналы системы спутникового телевещания и т.д.).

| Нажмите : | Для получения : |
|---|---|
| **Включение телетекста** | Эта функция предназначена для вызова телетекста, входа в режим наложения телетекст/изображение, а затем выхода из режима телетекста. В оглавлении, которое выводится на экран, перечислены все доступные для зрителя рубрики. Каждая рубрика обозначена 3-значным номером страницы. *Если выбранный канал не передает телетекст, на экране появится число 100 и канал останется пустым (в этом случае выйдите из режима телетекста и выберите другой канал).* |
| 0/9 **Выбор страницы телетекста** | Введите требуемый номер страницы с помощью кнопок 0 - 9 или − P +. Например: для страницы 120 наберите 1 2 0 : номер появится в левом верхнем углу экрана, счетчик страниц начнет поиск, и страница отобразится на экране. Повторите операцию для вызова другой страницы. *Если счетчик страниц продолжает выполнять поиск, это означает, что выбранная страница не передается. Выберите другой номер страницы.* |
| **Прямой доступ к рубрикам** | В нижней части экрана отображаются окрашенные зоны. Доступ к соответствующим рубрикам или страницам осуществляется при помощи 4 цветных кнопок. *Окрашенные зоны мигают, пока рубрика или страница не будут выведены на экран.* |
| **Оглавление** | Позволяет вернуться в оглавление (обычно, это страница 100). |
| **Увеличение страницы** | Служит для вывода на экран верхней или нижней части изображения, а затем возврата к нормальному изображению. |
| **Остановка прокручивания подстраниц** | Некоторые страницы имеют свои подстраницы, которые начинают автоматически сменять друг друга. Эта кнопка позволяет остановить или возобновить прокручивание подстраниц. При этом в верхней левой части появится индикация . |
| **Скрытая информация** | Служит для того, чтобы скрытая информация появилась или исчезла с экрана (решения для игр). |



Downloaded from www.Manualslib.com manuals search engine

- Stereoscopic Player (Trial) http://www.3dtv.at/Downloads/Index_en.aspx
- DDD TriDef Media Player (Trial) http://www.tridef.com/download/TriDef-3-D-Experience-4.0.2.html

**Note**: "3D L/R Invert" and "3D Format" are only available when "3D" is enabled.

# Language

| | |
|---|---|
| **Language** | Sets a language for the OSD menus. Use ▲ ▼ to select your preferred language. |

Downloaded from www.Manualslib.com manuals search engine

# FAQ AND TROUBLESHOOTING

This section lists frequently asked questions that may arise during the use of your tablet, and gives easy answers and solutions to these questions.

| Aspect | Question | Answer |
|---|---|---|
| Audio | Why is there no sound coming from the device? | If the headset is plugged into the device, the speaker is automatically shut off. Disconnect the headset. Check that the device volume setting is not muted. Check that the volume control is not at its lowest setting. |
| Memory | Why do I have less storage than the specifications say? | A small amount of memory is reserved for system security. |
| Multimedia files | Why can't I view my picture files? | You may be trying to view an image that is not supported. **See Supported formats on page 47** for more information. |
| | Why can't I view my video files? | You may be trying to view a video that is not supported. **See Multimedia on page 47** for more information. |
| | Why can't I play my music files? | You may be trying to play a file that is not supported. **See Multimedia on page 47** for more information. |

Downloaded from www.Manualslib.com manuals search engine

## 2.1.16 H-linearity control circuit

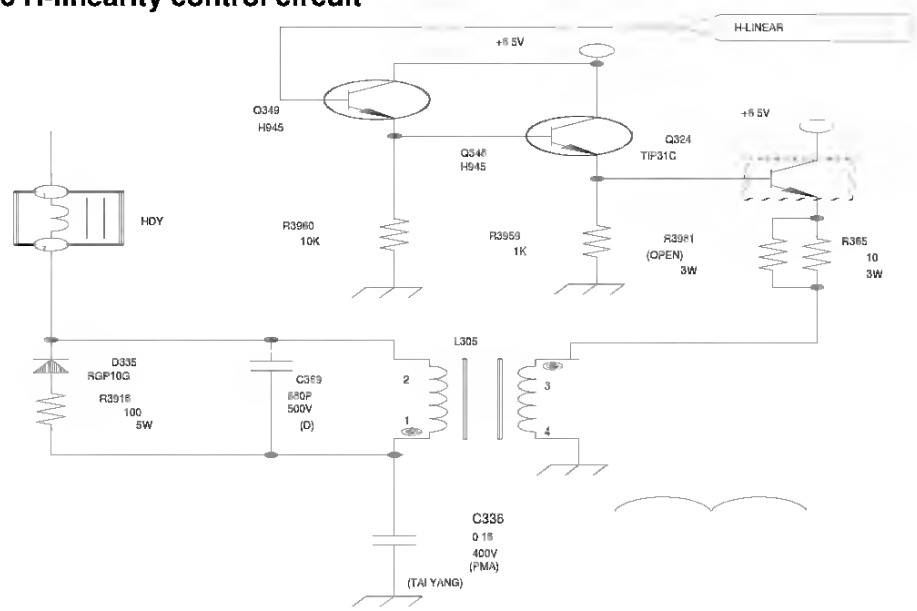


**FIGURE.13 H-linearity control circuit**

This monitor use a special linearity coil to get good linearity picture from 31kHz to 98kHz modes.

For the purpose of getting a DC control voltage from IC801 pin 28 H-Linear , and buffered by Q349, Q348.The DC control voltage proportional to different frequency. Thus we use the DC voltage and control Q324 Ie current in order to get excellent linearity from 31kHz to 95kHz modes. R3918 and C369 constitutes left ringing bar eliminated circuit to make left picture ringing bar disappear.

## 2.1.17 H-center circuit

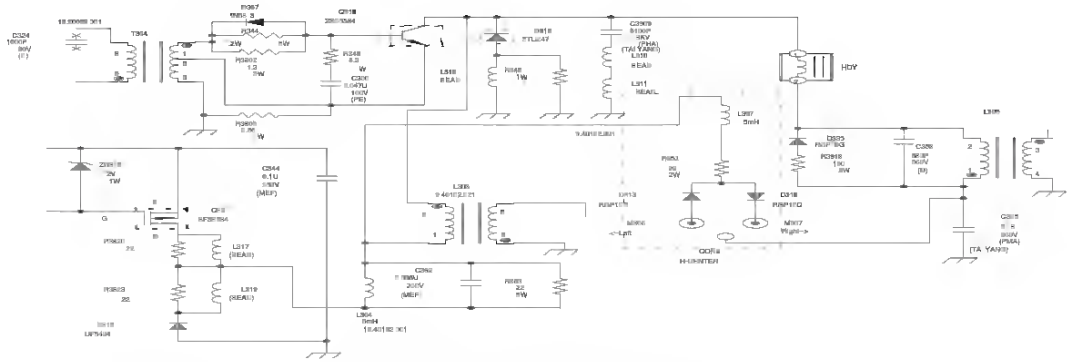

**FIGURE.14 H-center circuit**

L307, R353, D313, D314 constitutes H-center control circuit. When CQN3 connect to M306 , M307 for adjustment raster left and right , so H-DY current can be control in order to change raster horizontal position in the center of screen.

## 2.1.18 Hor. spot protective circuit

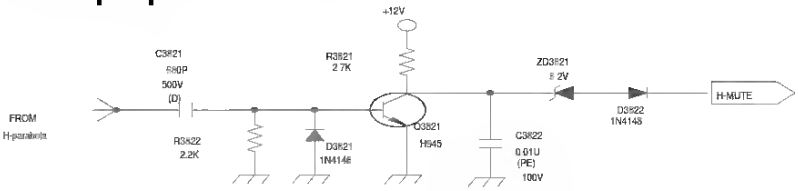



No Copy/Reproduction Allowed

Downloaded from www.Manualslib.com manuals search engine

## Comparison of CRT & LCD monitors

| CRT monitor | Flat panel display |
|---|---|
| *Advantages:*<br>• *Multiscan monitor.*<br>• *same quality in all resolutions.*<br>• *proven connector standard*<br>• *analog (infinite) colour depth*<br>• *no pixel errors*<br>• *also large proportions*<br>• *inexpensive* | *Advantages:*<br>• *no geometry errors*<br>• *no convergence errors*<br>• *excellent brightness and contrast values*<br>• *flicker-free*<br>• *insensitive to magnetic and electric fields*<br>• *low power consumption*<br>• *low heat build-up*<br>• *small footprint*<br>• *low weight* |
| *Disadvantages:*<br>• *geometry errors possible*<br>• *convergence errors possible*<br>• *limited brightness and contrast values*<br>• *only flicker-free from 72 Hz*<br>• *sensitive to magnetic and electric fields*<br>• *relatively high power consumption*<br>• *high heat build-up*<br>• *larger footprint*<br>• *high weight* | *Disadvantages:*<br>• *Multi-frequency monitor.*<br>• *best quality only in its native resolution.*<br>• *Absence of standards*<br>• *limited colour depth*<br>• *pixel errors*<br>• *no large proportions*<br>• *expensive* |

## Summary

Ultimately, it cannot be said that LCD monitors are superior to CRT monitors or vice-versa either. Rather when choosing which device to use you need to weigh up the advantages and disadvantages in order to decide which technology to use.

In the public and presentational arena, LC displays are definitely preferable over CRT monitors. In relation to the display workstation order, the small footprint is also an important argument and in this respect more favours flat panel displays. On the other hand, when it comes to particular colour depth, or you need a large viewable diagonal, the choice of a CRT monitor is still unrivalled.



Downloaded from www.Manualslib.com manuals search engine

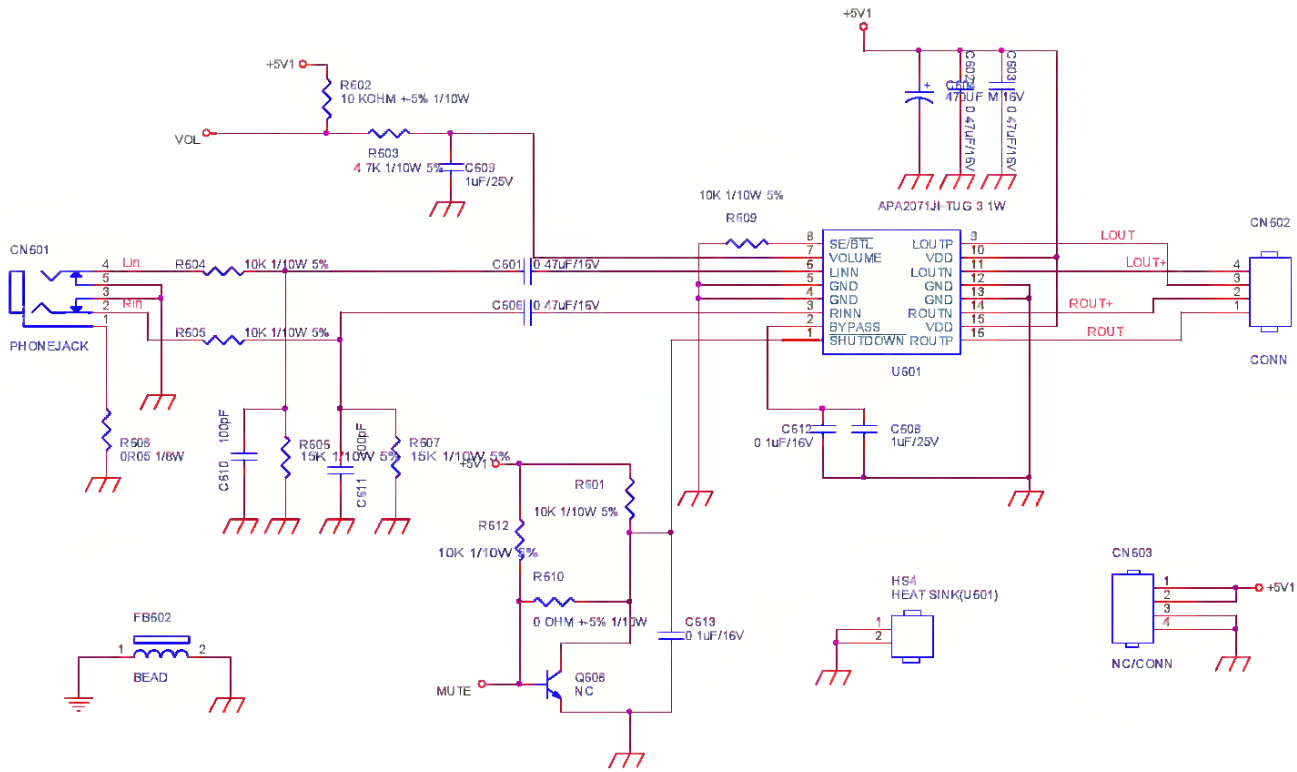


| | | | | | |
|---|---|---|---|---|---|
| TPV (Top Victory Electronics Co Ltd) | | OEM MODEL | | Size | A |
| 緬甸瓜鋼腹 | G2892 1A X-X-9-081111 | TPV MODEL | PWPC8C41AQHC | Rev | 1 |
| Key Component | 04 AUDIO | PCB NAME | 715G2892 1A | 称爹 | ODM MODEL |
| Date | Monday, November 10, 2008 | Sheet | 1 of 3 | | |



Downloaded from www.Manualslib.com manuals search engine

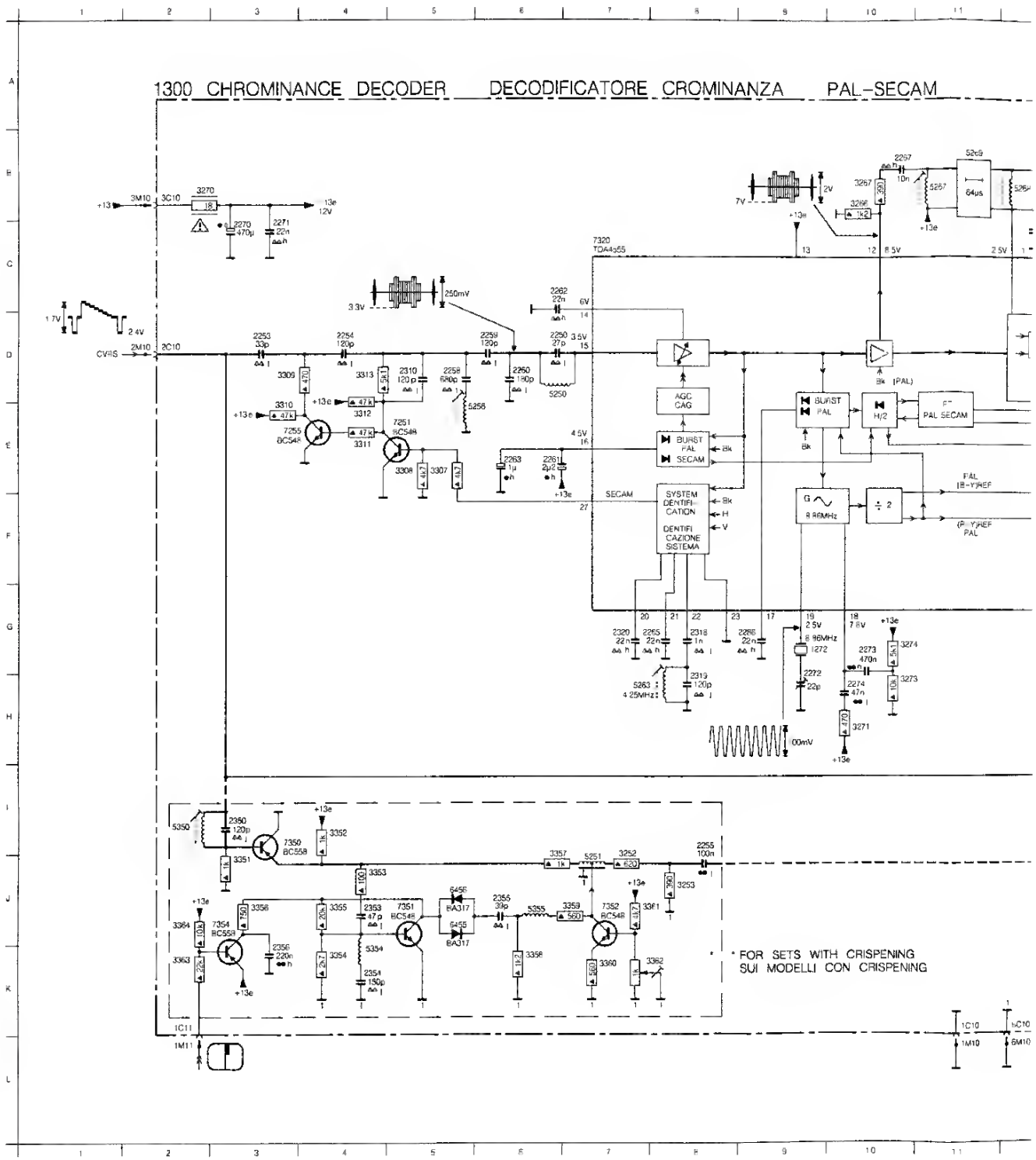


For Service Manuals
MAURITRON SERVICES
8 Cherry Tree Road, Chinnor
Oxfordshire, OX9 4QY.
Tel (01844) 351694
Fax (01844) 352554
email:- sales@mauritron.co.uk



Downloaded from www.Manualslib.com manuals search engine

# SECTION V
# BACKDATING

## 5-1. INTROOUCTION

This section contains backdating changes which make this manual applicable to earlier instruments. Where possible, backdating changes have been integrated into the manual text, parts list and schematic diagrams. Changes that are too long or otherwise impractical to integrate into the manual are covered in this section.

## 5.2. A5 0-20dB AMPLIFIER, 0-20dB ATTENUATOR, OIGITAL-TO-ANALOG CONVERTOR, ANO WEIN-BRIOGE OSCILLATOR CIRCUITS

Applies to Serial Numbers 2129A00100 Through 2129A00115

Affected Manual Areas

A5 Schematic
Replaceable Parts, Table 4-3

Description of Change

The following parts are applicable for these instruments:

| | | | | |
|---|---|---|---|---|
| A5C13 | 0180-0100 | CAPACITOR-FXD | 4.7UF | +−5% 20VDC |
| A5C14 | 0180-0100 | CAPACITOR-FXD | 4.7UF | +−5% 220VDC |
| A5R1 | 0683-4751 | RESISTOR | 470 | 5% .25W |
| A5R11 | 0683-4751 | RESISTOR | 470 | 5% .25W |
| A5R30 | 0698-3223 | RESISTOR | 1.24K | 1% .125W |
| A5R31 | 0757-0420 | RESISTOR | 750 | 1% .125W |
| A5R32 | 0698-4421 | RESISTOR | 249 | 1% .125W |
| A5R33 | 0698-4421 | RESISTOR | 249 | 1% .125W |
| A5R34 | 0757-0472 | RESISTOR | 200K | 1% .125W |
| A5R58 | 0757-0446 | RESISTOR | 15K | 1% .125W |
| A5R59 | 0757-0446 | RESISTOR | 15K | 1% .125W |
| A5R72 | 0757-0280 | RESISTOR | 1K | 1% .125W |
| A5R76 | 0757-0280 | RESISTOR | 1K | 1% .125W |

The following parts apply to Serial Number 2129A00100:

| | | | | |
|---|---|---|---|---|
| A5C11 | 0160-4571 | CAPACITOR-FXD | .1UF | +80−20% 50VDC |
| A5R77 | 0698-4433 | RESISTOR | 2.26K | 1% .125W |

The following parts apply to Serial Numbers 2129A00101 through 2129A00115:

| | | | | |
|---|---|---|---|---|
| A5C11 | 0160-4835 | CAPACITOR-FXD | .1UF | 50VDC |
| A5R77 | 0698-8025 | RESISTOR | 1910 | .125W |



Downloaded from www.Manualslib.com manuals search engine

## Attaching Component Rails to the Server

1. Place the tab on a component rail at the front of the server chassis. The holes in the component rail will line up only one way with the chassis.
2. Attach the flat side of a component rail to each side of the server chassis with five 8-32 x 1/4-inch Phillips screws. Do not use washers with the screws.

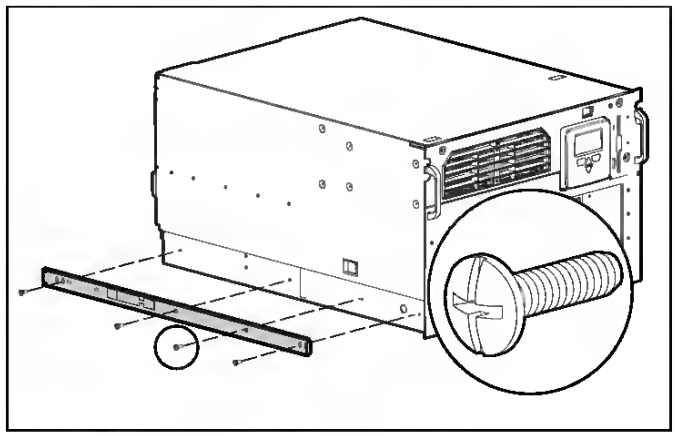

Figure 3-12. Attaching a component rail to the server



Downloaded from www.Manualslib.com manuals search engine

**Acer America Corporation**
333 West San Carlos St ,
Suite 1500
San Jose, CA 95110
U S A
Tel 254-298-4000
Fax 254-298-4147
www.acer.com

# Federal Communications Commission
# Declaration of Conformity

This device complies with Part 15 of the FCC Rules. Operation is subject to the following two conditions: (1) this device may not cause harmful interference, and (2) this device must accept any interference received, including interference that may cause undesired operation.

The following local Manufacturer /Importer is responsible for this declaration:

| | |
|---|---|
| Product: | DLP Projector |
| Model Number: | V9800/V370/HT-4K50/A4K1603 |
| Name of Responsible Party: | Acer America Corporation |
| Address of Responsible Party: | 333 West San Carlos St<br>Suite 1500<br>San Jose, CA 95110<br>U S A |
| Contact Person: | Acer Representative |
| Phone No.: | 254-298-4000 |
| Fax No.: | 254-298-4147 |

Downloaded from www.Manualslib.com manuals search engine

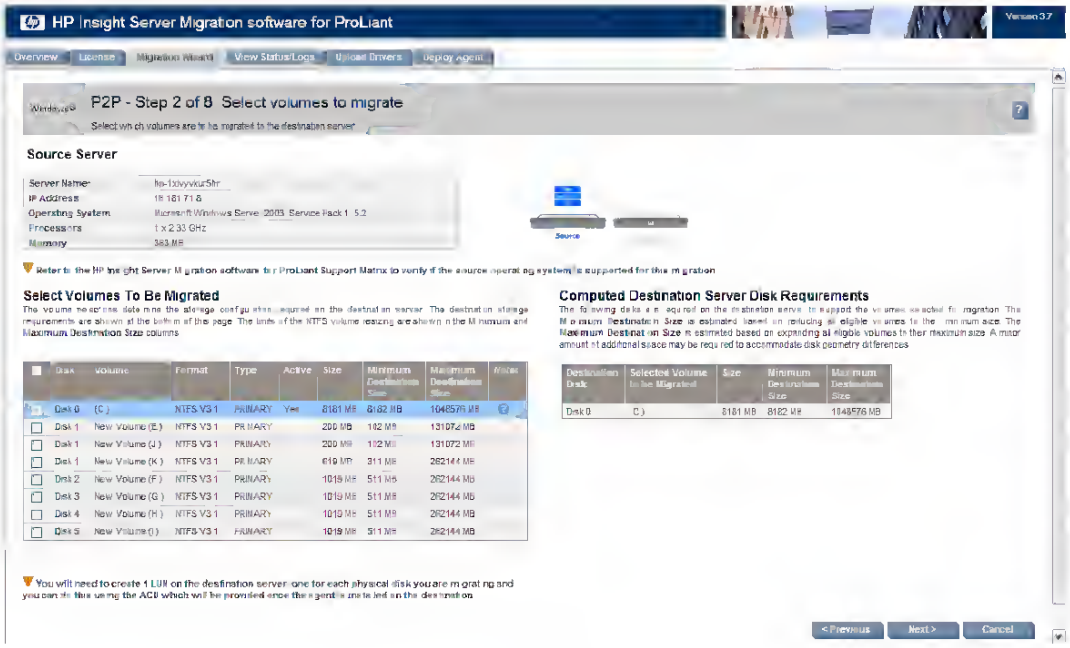


The **Computed Destination Server Disk Requirement** section lists the disks required on the destination server to support migrated volumes. The **Size**, **Minimum Destination Size**, and **Maximum Destination Size** values in the lower table are updated dynamically as volumes in the upper table are selected or cleared for migration. A message appears under the table, indicating the number of logical units that must be created on the destination server. The entry in the **Minimum Destination Size** column is estimated, based on reducing eligible volumes to their minimum size during migration. Additional space might be required to accommodate disk geometry differences.

5. Select how the destination server is booted:

   - **Manual - Boot destination server myself**—If the destination server is booted to the SMP Boot CD and the destination agent is launched, select this option.

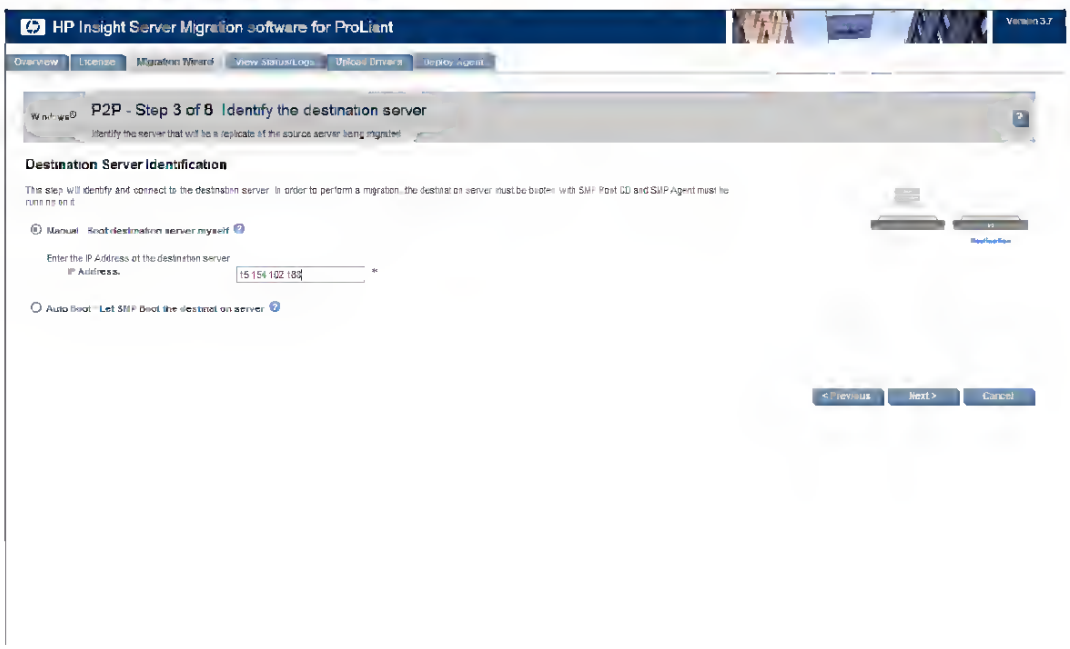


   - **Auto Boot - Let SMP boot the destination server**—If the destination server is not booted to the SMP Boot CD and the destination agent is not launched, select this option.



Downloaded from www.Manualslib.com manuals search engine

English

# Cleaning and replacing the dust filters

### Cleaning the dust filters

Clean the dust filters after every 1000 hours of use. If they are note cleaned periodically, they can become clogged with dust, preventing proper ventilation. This can cause overheating and damage the projector.

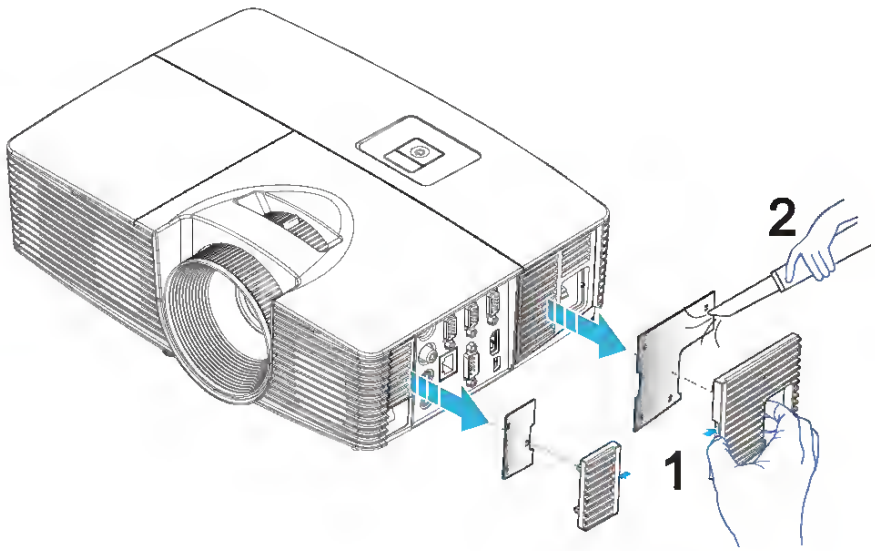


Follow these steps:

1 Turn the projector off. Wait for the Power LED to stop flashing then unplug the power cord.
2 Allow the projector at least 30 mins to cool down.
3 Pull out the dust filter. (Illustration #1)
4 To clean the dust filters, use a small vacuum cleaner designed for computers and other office equipment. (Illustration #2)
5 If the dirt is difficult to remove or the filter is broken, please contact your local dealer or service center to obtain a new filter.



Downloaded from www.Manualslib.com manuals search engine

**Table 12 Additional Malfunctions Not Recorded in the Event Log (continued)**

| Symptom | Possible Cause | Corrective Action |
|---|---|---|
| Erratic Readings | Calibration standards have the same value<br>Inadequate bubble removal from sample | Verify the accuracy of calibration standards and recalibrate the instrument.<br>Increase the signal averaging time to a longer interval.<br>Make sure the Bubble Reject feature is turned on.<br>Slow the flow of sample into the instrument. |
| High Readings | Deionized water turbidity is greater than 0.5 NTU | Clean the instrument.<br>Access Calibration History for turbidity value of ultra-filtered water.<br>Verify the flow is between 200–750 mL/min.<br>Recalibrate the instrument. |

## 7.3 Event Codes

Event codes are not displayed on the screen of the sc100 and must be downloaded from the event log to be viewed. See section 4.7 on page 36 for additional information. Troubleshooting actions are given in section Table 11 on page 53.

**Table 13 Event Log List**

| Event | Event # | Data1 | Data2 | Data3 |
|---|---|---|---|---|
| Bubble Reject Change | 0 | 0 = OFF<br>1= ON | — | — |
| Filter Size Change | 1 | 0 = No avg<br>1 = 6 sec<br>2 = 30 sec<br>3 = 60 sec<br>4 = 90 sec | — | — |
| Data Log Interval Change | 2 | 0 = 30 sec<br>1 = 1min<br>2 = 5 min<br>3 = 10 min<br>4 = 15 min | — | — |
| Power On | 3 | 1 | — | — |
| Calibration | 4 | Cal Gain | Initials | — |
| Verification | 5 | Expected Value | Meas Value | Initials |
| Dark Reading Warning | 6 | Measured Value | — | — |
| Temperature Warning | 7 | Temperature Value | — | — |
| Voltage Warning | 8 | 16 = +5V high<br>32 = +5V low<br>64 = V in high<br>128 = V in low | — | — |
| Lamp Warning | 9 | 1 = lamp V high<br>2 = lamp V low<br>4 = lamp I high<br>8 = lamp I low | — | — |
| A/D Fail | 10 | 1 | — | — |
| Lamp Fail | 11 | 2 | — | — |
| Flash Fail | 12 | 3 | — | — |
| Output Mode Change | 13 | 1 = Hold<br>2 = Transfer | — | — |



Downloaded from www.Manualslib.com manuals search engine

# Service

The section "What do I do if..." lists some faults that you can remedy yourself. Look there first if a fault occurs.

**Is it a technical fault?**

Then contact your nearest customer service centre. (Addresses and telephone numbers can be found under "Customer Service Centres".)

Always prepare in advance for the discussion. By doing so you will make it easier to diagnose the fault and decide whether customer service is necessary.

Please make a note of the folllowing information as accurately as possible:

- What form does the fault take?
- Under what circumstances does the fault occur?

Prior to the telephone call it is imperative that you make a note of the following appliance code numbers that are given on the rating plate:

- PNC Code (9 digits),
- S No Code (8 digits).

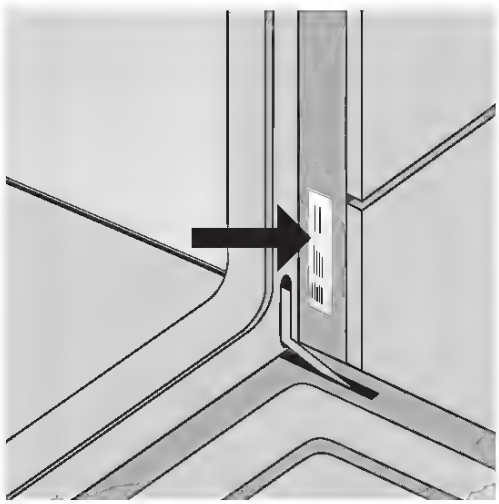

We recommend that you record the code numbers here so that you always have them to hand:

PNC . . . . . .

S No. . . . . .

**When do you incur costs even during the warranty period?**

- if you could have remedied the fault using the fault table (see section "What to do if ..."),
- if the customer service technician has to make several journeys because he was not provided with all the relevant information before his visit and therefore, for example, has to fetch spare parts. These multiple trips can be avoided if you prepare for your phone call as described above.



Downloaded from www.Manualslib.com manuals search engine

English

# Arcade Hot keys

When running in the Windows environment, the key combinations listed below are available to control and fine-tune the features and settings of Aspire Arcade.

| Hot key | Function |
|---|---|
| **Fn+F1** | On-line help menu |
| **Fn+F3** | ePowerManagement with battery info |
| **Fn+F5** | Display toggle |
| **Fn+F6** | Screen blank |
| **Fn+F8** | Speaker toggle |
| **Fn +** ↑ | Volume up; increases the speaker volume. |
| **Fn +** ↓ | Volume down; decreases the speaker volume |
| **Fn +** → | Brightness up; increases the screen brightness |
| **Fn +** ← | Brightness down; decreases the screen brightness |
| **Fn + Home** | Play; press to start playing the audio track or video file. Press again to pause. |
| **Fn + Pg Up** | Stop; press to stop playing the audio track or video file. |
| **Fn + Pg Dn** | Backward; press to skip backward to the previous track or video file and start playing. |
| **Fn + End** | Forward; press to skip forward to the next track or video file. |

Downloaded from www.Manualslib.com manuals search engine

- Create new workbooks on your handheld, such as expense reports and mileage logs, or you can copy workbooks from your computer to your handheld.
- Synchronise workbooks between your computer and your handheld so that you have the most up-to-date content in both locations.

## Creating a new workbook

- Tap , Programs, Pocket Excel, and then New.

  A blank workbook appears. Or, if you've selected a template for new workbooks in the Options dialog box, that template appears with appropriate text and formatting already provided.

You can open only one workbook at a time; when you open a second workbook, you'll be asked to save the first. You can save a workbook you create or edit in a variety of formats, including:

- Pocket Excel (.pxl)
- Excel (.xls).

**NOTE:** When you choose to create a new document, you will be prompted to save any already open document.

## To create a Pocket Excel file list

Pocket Excel contains a list of the files stored on your handheld.

- Tap a file in the list to open it.
- To delete, make copies of, and send files, tap and hold a file in the list. Then select the appropriate action from the pop-up menu.

### Displaying the toolbar

Pocket Excel provides fundamental spreadsheet tools, such as formulas, functions, sorting, and filtering, in its toolbar.



Downloaded from www.Manualslib.com manuals search engine

# REGLAGE DE L'HORLOGE

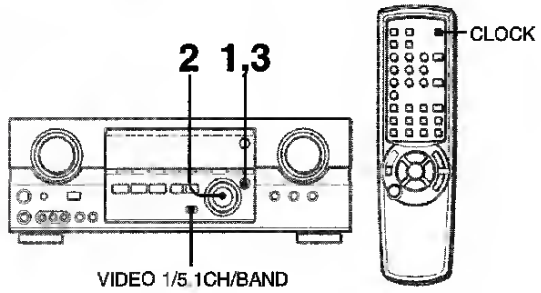


Quand le cordon sacteur ast raccordé au secteur pour la première fois, l'horloge clignote sur l'affichaur.
**Réglez-la de la façon auivanta quend l'ampli-tuner est éteint.**

**1 Appuyez sur la touche SET.**
La fenêtre d'affichage devient légèrement plus claira.

**2 Tournez MULTI JOG pour désigner l'heure et les minutes.**
L'heure avance lorsque vous tournez vars la droite et diminua lorsqua vous tournez vers la gauche.

**3 Appuyez sur la touche ENTER.**
L'horloga démarre à partir da 00 saconda.

**REMARQUE**

**Lors du premier réglage de l'horloge après l'achat**
Toutes les indications da la fanêtra d'affichage disparaissent. La raison en est que la moda d'économia d'énargia da l'apparail est activé; il ne s'agit pas d'un dysfonctionnement.
Le mode d'économie d'énergie peut être annulé. Pour plus de détails, voir page 6.

**Pour remettre l'horloge à l'heure**
Appuyez sur l'interrupteur POWER pour mettre l'ampli-tuner hors tension. Appuyez sur la touche ENTER et effectuez les opérations 1 à 5 ci-dassus.

**Pour afficher l'heure actuelle**
Appuyez sur la touche CLOCK de la télécommande. L'heure est affichée pendant 4 secondes.

**Pour passer au standard de 24 heures**
Appuyez sur l'interrupteur VIDEO 1/5.1CH/BAND pendant que l'heura est affichéa.
Répétez la même opération pour rétablir le standard da 12 hauras.

**Si l'affichage de l'heure clignote quand l'empli-tuner est hors tension**
Il y a eu une interruption de courant. L'horloge doit être remise à l'heure.
Si l'alimentation est interrompue pendant plus de 24 heures, tous las réglagas mémorisés après l'achat doivant âtra da nouveau effectués.

# REGLAGE DE LA MINUTERIE D'ARRET

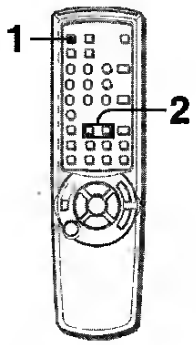


L'ampli-tunar paut être automatiquement mis hors tension à une haure précise.

Pour ce réglage, utilisez la télécommanda.

**1 Appuyez sur la touche SLEEP.**

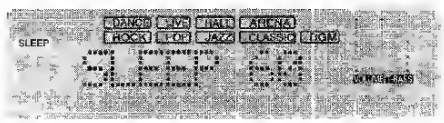


**2 En l'espace de quatre secondes, désignez le temps de fonctionnement de l'ampli-tuner en appuyant sur la touche UP ou DOWN.**
A chaque pression sur la touche, le temps change par incréments de 5 minutes de 5 à 240 minutes.

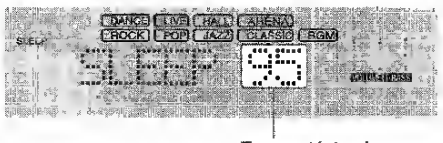


Temps désigné

Vous pouvaz égalamant réglar l'haura à l'aida da MULTI JOG sur l'appareil principal.

**Pour vérifier le temps restant jusqu'à la mise hors tension**
Appuyez une fois sur la touche SLEEP. Le temps restant est affiché pandant quatra sacondes.

**Pour arrêter la minuteria**
Appuyez deux fois sur la touche SLEEP pour que "SLEEPoFF" disparaisse de l'afficheur



Downloaded from www.Manualslib.com manuals search engine

Downloaded from www.Manualslib.com manuals search engine

All manuals and user gui

This chapter contains instructions on how to upgrade your computer and basic information about your system boards that you will find helpful when performing the upgrade process.

# SOINS ET ENTRETIEN

Un entretien et des soins réguliers de l'appareil et des disques et cassettes sont nécessaires pour assurer un fonctionnement optimal.

**Nettoyage du coffret**
Utiliser un chiffon doux et sec.
Si l'appareil est extrêmement sale, utiliser un chiffon doux légèrement imbibé d'une solution détergente douce. Afin de ne pas altérer le fini de l'appareil, ne pas utiliser de solvants forts, tels que de l'alcool, de la benzine ou du diluant.

**Nettoyage des têtes du magnétocassette**
Quand les têtes du magnétocassette sont sales:
- il n'y a pas de sons aigus
- le son est trop faible
- le son est déséquilibré
- l'effacement d'une cassette est impossible
- l'enregistrement d'une cassette est impossible

Toutes les dix heures d'utilisation, nettoyer les têtes du magnétocassette avec une cassette prévue à cet effet.
Pour plus de détails, se référer au mode d'emploi de la cassette de nettoyage.

**Démagnétisation des têtes du magnétocassette**
A la longue, les têtes du magnétocassette peuvent devenir magnétisées. Ceci peut restreindre la plage de sortie des cassettes enregistrées et augmenter le bruit.
A l'aide d'une cassette de démagnétisation disponible dans le commerce, démagnétiser les têtes du magnétocassette toutes les 20 à 30 heures d'utilisation.
Pour plus de détails, se référer au mode d'emploi de la cassette de démagnétisation.

**Soin des disques**
• Si un disque est sale, l'essuyer du centre vers l'extérieur avec un chiffon de nettoyage.

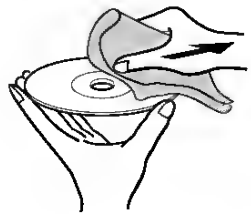

• Après la lecture d'un disque, le ranger dans son étui. Ne pas laisser le disque dans un endroit chaud ou humide.

**Soin des cassettes**
• Après l'utilisation, ranger les cassettes dans leurs boîtes.
• Ne pas laisser les cassettes près d'un aimant, d'un moteur électrique, d'un téléviseur ou de toute autre source de champ magnétique. Cela diminuerait la qualité sonore et provoquerait du souffle.
• Ne pas exposer les cassettes au soleil ni les laisser dans un véhicule garé au soleil.

---

**Pour réinitialiser**
Si une anomalie apparaît sur la fenêtre d'affichage ou dans le magnétocassette, réinitialiser l'appareil de la manière suivante.
1 Appuyer sur **POWER** pour couper l'alimentation.
2 Appuyer sur **POWER** tout en appuyant sur ■ **CLEAR** pour remettre l'appareil sous tension. Toutes les données mémorisées après l'achat sont effacées.

Si à l'étape 1 l'alimentation ne peut pas être coupée du fait d'une anomalie, réinitialiser en débranchant le cordon secteur puis le rebrancher. Ensuite, effectuer l'étape 2.

# EN CAS DE PROBLEME

Si l'appareil ne fonctionne pas comme décrit dans ce mode d'emploi, contrôler le guide suivant.

**GENERALITES**
**Il n'y a pas de son.**
• Le cordon secteur est-il branché correctement?
• N'y a-t-il pas une mauvaise connexion? (→ page 4)
• Il y a peut-être un court-circuit dans les bornes d'enceinte.
→ Débrancher le cordon secteur puis corriger les connexions d'enceinte.
• Une touche de fonction incorrecte n'est-elle pas en service?
**Le son ne sort que par une enceinte.**
• L'autre enceinte n'est-elle pas déconnectée?
**Un affichage ou un fonctionnement erroné se produit.**
→ Réinitialiser l'appareil comme indiqué ci-dessous.
**L'appareil s'éteint quand l'alimentation est coupée.**
• Le mode économie d'énergie n'est-il pas réglé sur "ECO ON" ou "ECO AUTO"? (fl page 6)
**La mise sous tension ne se fait pas.**
→ Débrancher le cordon secteur puis le rebrancher au bout de quelques secondes.

**PARTIE TUNER**
**Il y a des charges statiques constantes en forme d'onde.**
• L'antenne est-elle raccordée correctement? (→ page 4)
• Le signal n'est-il pas faible?
→ Connecter une antenne extérieure.
**La réception présente des parasites ou le son présente de la distorsion.**
• Le système ne capte-t-il pas des bruits extérieurs ou des ondes réfléchies?
→ Changer l'orientation de l'antenne.
→ Eloigner l'appareil d'autres appareils électriques.

**PARTIE MAGNETOCASSETTE**
**La bande ne défile pas.**
• La platine 2 n'est-elle pas en mode pause? (→ page 12)
**Le son est déséquilibré ou trop faible.**
• La tête de lecture n'est-elle pas sale? (→ page 20)
**L'enregistrement est impossible.**
• Un ergot de sécurité de la cassette n'est-il pas absent? (→ page 13)
• La tête d'enregistrement n'est-elle pas sale? (→ page 20)
**L'effacement est impossible.**
• La tête d'effacement n'est-elle pas sale? (→ page 20)
• Une cassette au métal n'est-elle pas utilisée?
**Il n'y a pas de sons aigus.**
• La tête d'enregistrement/de lecture n'est-elle pas sale? (→ page 20)

**PARTIE LECTEUR DE DISQUES COMPACTS**
**La lecture ne fonctionne pas.**
• Le disque est-il correctement mis en place? (→ page 10)
• Le disque n'est-il pas sale? (→ page 20)
• N'y a-t-il pas de la condensation sur la lentille?
→ Attendre environ une heure puis essayer de nouveau.



Downloaded from www.Manualslib.com manuals search engine

## Az állomások kézi programozása

**(Kézi memória)**

1 A **BAND** gomb többszöri megnyomásával válassza ki a kívánt hullámsávot (FM 1, FM 2, FM 3, MW vagy LW).
2 A ▲ vagy a ▼ megnyomásával hangoljon rá egy kívánt állomásra (lásd a „Ráhangolás egy rádióállomásra" című rész is, amely egy másik hangolási módszert ismertet).
3 Nyomja meg és tartsa megnyomva a kívánt programozott rádióállomás gombját addig amíg a készülék hangjelzést nem ad.

**Megjegyzés**

Az újabban beprogramozott állomás a helyébe lép annak az állomásnak amelyik azonos hullámsávban azonos programgombhoz volt korábban hozzárendelve.

## Ráhangolás egy beprogramozott állomásra

1 A **BAND** gomb többszöri megnyomásával válassza ki a kívánt hullámsávot (FM 1, FM 2, FM 3, MW vagy LW).
2 Nyomja meg azt a programgombot amelynél a kívánt állomás van beprogramozva.

**Aktív vételi szabályozás (ATRC)**

A készülék automatikusan elnyomja a gépkocsi mozgásából adódó FM zajt és megőrzi a hangminőséget.

# A CD JÁTSZÓ HASZNÁLATA

## CD lejátszása

Az alább ismertetett eljárás révén CD, CD-R és CD-RW lemezek játszhatók le.

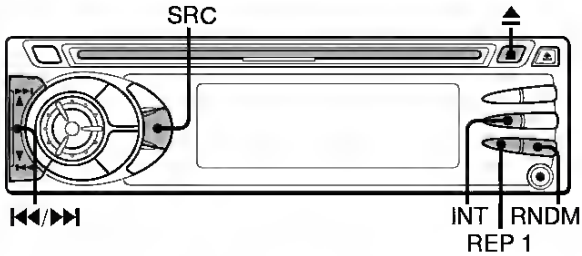


1 Helyezzen be egy CD-t.
A „CD" válik láthatóvá a kijelzőn.
Megindul a CD lejátszása.
Ha már van behelyezve egy CD, akkor a **SRC** többszöri megnyomásával válassza ki a CD lejátszási módot.
Normál lejátszás esetében miután az utolsó műsorszám véget ér, a készülék visszatér az első műsorszámhoz és folytatja a lejátszást.

| Ha | Akkor nyomja meg |
|---|---|
| Ki akar venni egy CD-t | ⏏ |
| Ki akarja hagyni a következő műsorszámot | ⏭ |
| Vissza akar menni az aktuális műsorszám elejére<br>Minden egyes megnyomás egy további műsorszámmal léptet vissza | ⏮ |
| Meg akar keresni egy pontot egy műsorszámon belül | Nyomja meg és tartsa megnyomva a ⏮ vagy a ⏭ gombot, amíg meg nem találja a pontot. |

**Megjegyzések**

- Ha egy már korábban behelyezett CD-t akar lejátszani, a CD lejátszása arról a pontról folytatódik, ahol korábban a lejátszás megállt. Egy újonnan behelyezett CD esetében a lejátszás az első műsorszámnál kezdődik.
- Előfordulhat, hogy a CD-R illetve a CD-RW lejátszása némileg késve kezdődik, de ez nem jelent hibás működést.
- Ha olyan CD-R vagy CD-RW lett behelyezve, amelyen nincs adat, vagy nem kompatibilis adatok vannak, akkor az „E03" jelenik meg a kijelzőn. A készülék ilyen lemezek lejátszására nem alkalmas.

**Bevezető (introdukciós) lejátszás**

A kívánt műsorszám a CD-n található összes műsorszám első 10 másodpercébe történő belehallgatással is megkereshető.

1 Nyomja meg az **INT** gombot CD lejátszás közben.
A „SCAN" válik láthatóvá a kijelzőn.
2 A kívánt műsorszám lejátszásakor, nyomja meg ismét az **INT** gombot.
A készülék visszatér a normál CD lejátszási állapotba.



Downloaded from www.Manualslib.com manuals search engine

## Configuring screen options

You can change orientation, align the screen, enable ClearType and adjust text size to make viewing your smartphone as comfortable as possible.

1. Tap **Start** > **Settings** > **System** > **Screen** > **General** tab.
2. Select screen orientation and tap **Align Screen** if you need to re-align the screen.
3. Tap the **ClearType** tab. Select to enable ClearType.
4. Tap the **Text Size** tab. Move the slider to adjust text size.
5. Tap **OK** to confirm and save.

# Updating your smartphone

You may use he Notification Manager to check for updates to your smartphone's software.

1. Tap **Start** > **Notification Manager**.
2. Tap **Check now** to see if an update is available.

**Important:** You may be charged additional fees when connecting over GPRS.

If updates are available, brief information about each update will be displayed. Tap an update to see download options. Some updates may be donwloaded directly to your smartphone, others must be run from a computer.

Tap Generate URL to create a download link. You may then transfer this link to your PC in order to download and run the update. See **"Connecting to a PC" on page 54**.

The link may be found in the **My Documents** folder. Tap **Start** > **File Explorer** > **Notification Manager**. You may transfer this shortcut to your computer and use your computer's Internet



Downloaded from www.Manualslib.com manuals search engine

# Appendix C Optional Touchscreen

## C.1 Specifications

**Electrical**

| | |
|---|---|
| Operating Voltage: | 3.3 to 5 VDC typical |
| Sheet Resistance: | 220 ± 30% W/square |
| Linearity: | +/- 1.5% full scale linearity error in either direction. |
| Insulation Resistance: | > 20 MΩ @ 25 VDC. |

**Optical**

| | |
|---|---|
| Total light Transmission: | 68% typical (> 66% @ 550 nm test) |

**Environmental**

| | |
|---|---|
| Operating Temperature Range: | -20°C to +50°C, ambient humidity |
| Storage Temperature High: | +70°C, 500 hours at ambient humidity |
| Storage Temperature Low: | -40°C, continuous at ambient humidity |
| Accelerated Aging: | 100 hours continuous exposure at 60°C/95% RH |
| | Thermal Shock: 25 cycles (one cycle is 30 min. dwell alternating from -40°C to +85°C with less than 10 min. trans fer time). |

**Mechanical**

| | |
|---|---|
| Activation Method: | Gloved or ungloved finger |
| | Delrin or plastic stylus (no metal) with 1mm radius full hemispherical tip |
| Activation Force: | < 70g average with non-metal stylus |
| | < 90g average with 5/8" diameter sili cone finger |



Downloaded from www.Manualslib.com manuals search engine

## Changing the Enforcement Server Network Settings

**CAUTION:** Back up your system immediately after changing the MS or ES IP address. If you do not back up with the new IP address, and later restore your system, it will restore the previous IP address which can show an ES error condition and cause authentication problems. See "Maintenance" on page 3-91 for instructions on backing up and restoring your system.

To change the Enforcement server network settings:

**NAC 800 Home window>>System configuration>>Enforcement clusters & servers>>Select an ES>>Configuration**

Modify any of the following **Network settings** you want to change:

- Enter a new Enforcement server in the **Host name** text field. For example, `garp.mycompany.com`
- Enter a new Enforcement server address in the **IP address** text field. For example, `192.168.153.35`
- Enter a new netmask in the **Network mask** text field. For example, `255.255.255.0`
- Enter a new gateway in the **Gateway IP address** text field. For example `192.168.153.2`
- Enter one or more DNS resolver IP addresses, separated by commas, semicolons, or spaces in the **DNS IP addresses** text box. For example: `10.0.16.100,10.0.1.1`

**NOTE:** The NAC 800 Enforcement server's host name must be a fully qualified domain name (FQDN). For example, the FQDN should include the host and the domain name—including the top-level domain.
For example, waldo.mycompany.com. Select names that are short, easy to remember, have no spaces or underscores, and the first and last character cannot be a dash (-).

**NOTE:** You cannot change the ES IP address for a single-server installation. You can change the MS IP address for a single-server installation.

## Changing the Enforcement Server Date and Time

To change the Enforcement server date and time:

# CONNEXION D'UN APPAREIL OPTIONNEL

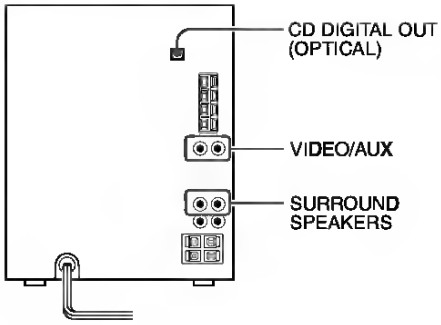


Pour plus de détails, se reporter au mode d'emploi de l'appareil connecté.

- Les cordons de raccordement ne sont pas fournis. Se procurer les cordons nécessaires.
- Pour les appareils optionnels disponibles, consulter le distributeur Aiwa local.

## PRISES VIDEO/AUX

Cet appareil peut recevoir des signaux sonores analogiques par ces prises.
Utiliser un câble à fiches phono RCA pour connecter un appareil audio (tourne-disque, lecteur de disque laser, lecteur de minidisque, magnétoscope, téléviseur, etc.).
Connecter la fiche rouge à la prise **VIDEO/AUX R** et la fiche blanche à la prise **VIDEO/AUX L**.

**Pour connecter un tourne-disque**
Utiliser un tourne-disque Aiwa muni d'un amplificateur à égaliseur intégré.

## PRISE CD DIGITAL OUT (OPTICAL)

Cet appareil peut sortir les signaux sonores numériques de disque compact par cette prise.
Utiliser un câble optique pour connecter un appareil audio numérique (platine DAT, enregistreur de minidisque, etc.).
Enlever le capuchon antipoussière ⓐ de la prise **CD DIGITAL OUT (OPTICAL)**. Ensuite, connecter la fiche d'un câble optique à cette prise.

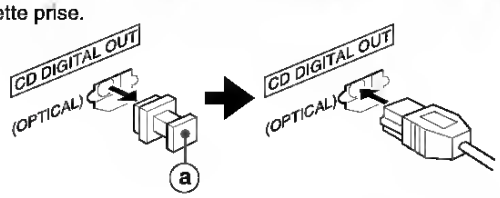


**Quand la prise CD DIGITAL OUT (OPTICAL) n'est pas utilisée**
Mettre en place le capuchon antipoussière fourni.

## PRISES SURROUND SPEAKERS

Connecter des enceintes surround optionnelles d'une impédance de 8 à 16 ohms à ces prises.
Pour obtenir un son normal, veiller à connecter des enceintes surround droite et gauche à ces prises.

# ECOUTE DE SOURCES EXTERNES

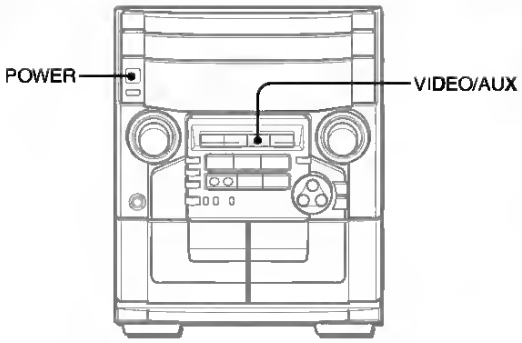


Pour utiliser l'appareil connecté aux prises VIDEO/AUX, procéder de la manière suivante.

**1 Appuyer sur VIDEO/AUX.**
"VIDEO" apparaît sur l'affichage.

**2 Mettre l'appareil connecté en lecture.**

**Pour changer un nom de source sur l'affichage**
Quand on appuie sur **VIDEO/AUX**, "VIDEO" est affiché initialement. On peut remplacer ce nom par "VIDEO", "AUX" ou "TV".
L'appareil étant sous tension, appuyer sur **POWER** tout en appuyant sur **VIDEO/AUX**.
Répéter cette procédure pour selectionner un des noms.



F



Downloaded from www.Manualslib.com manuals search engine

## 5. Operational Methods of Test Items

- Among all the test items, only SD/ExSD Test Item needs to insert SD card, other test items have no limits.
- During the test, you can exit the current test when clicking on "Back Key" and return to the main test interface, the current test will keep the last test result.

## 6. Test Content Description

### 6.1 Touch----TP Test

According to the displayed red line, finish drawing each red line in turn. During the process, your finger can not leave the screen until the current line is completely finished.

- **The 1st test:** Use one finger to finish drawing four lines on the periphery of screen in turn. Each red line will disappear after finishing draw every time.
  Test interface as below: The left diagram is a screenshot of beginning while the right one is a screenshot of drawing. The white line is a drawing route. Note that your finger can not leave the screen until the current line is completely finished.

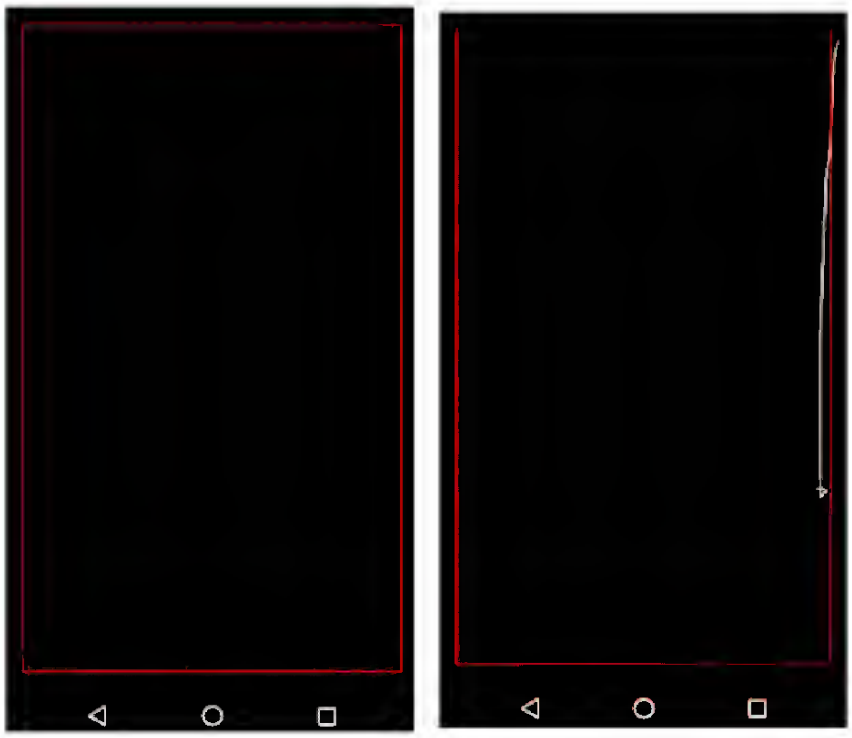

- **The 2nd test:** Draw diagonal lines in turn, which is identical to the above method.



Downloaded from www.Manualslib.com manuals search engine

English

## Special considerations

In addition to the guidelines for taking the computer home, follow these guidelines to protect your computer while traveling:

- Always take the computer as carry-on luggage.
- If possible, have the computer inspected by hand. Airport security X-ray machines are safe, but do not put the computer through a metal detector.
- Avoid exposing floppy disks to hand-held metal detectors.

# Traveling internationally with the computer

When you are moving from country to country.

## Preparing the computer

Prepare the computer as you would normally prepare it for traveling.

## What to bring with you

Bring the following items with you:

- AC adapter
- Power cords that are appropriate for the country to which you are traveling
- Spare, fully-charged battery packs
- Additional printer driver files if you plan to use another printer
- Proof of purchase, in case you need to show it to customs officials
- International Travelers Warranty passport

## Special considerations

Follow the same special considerations as when traveling with the computer. In addition, these tips are useful when traveling internationally:

- When traveling in another country, check that the local AC voltage and the AC adapter power cord specifications are compatible. If not, purchase a power cord that is compatible with the local AC voltage. Do not use converter kits sold for appliances to power the computer.
- If you are using the modem, check if the modem and connector is compatible with the telecommunications system of the country you are traveling in.

Downloaded from www.Manualslib.com manuals search engine

# Schedule

View the events scheduled on the smartphone.

1. From the Apps screen, rotate the bezel to **10 Schedule**.
2. Rotate the bezel to view other months.
3. Tap a day on the monthly calendar.
   - The day's events list is displayed.
   - Tap an event to view its details
4. Rotate the bezel to view other scheduled events.



Downloaded from www.Manualslib.com manuals search engine

To install a Processor Power Module:

**CAUTION:** The redundant Processor Power Module must be installed before the processor. Attempting to install the Processor Power Module after installing the processor could damage the electronic components on the Processor Power Module.

1. Line up the Processor Power Module with the guides in the processor cage at the appropriate processor board slot ❶.
2. Open the Processor Power Module ejector levers to 90 degree angles. Then fully seat the Processor Power Module into its processor board slot.

**CAUTION:** Do not push the Processor Power Module into place by pushing on the ejector levers.

3. Push the Processor Power Module onto the processor board until the levers lower to a flat position ❷.

**NOTE:** An audible click should occur, indicating that the Processor Power Module is fully seated.

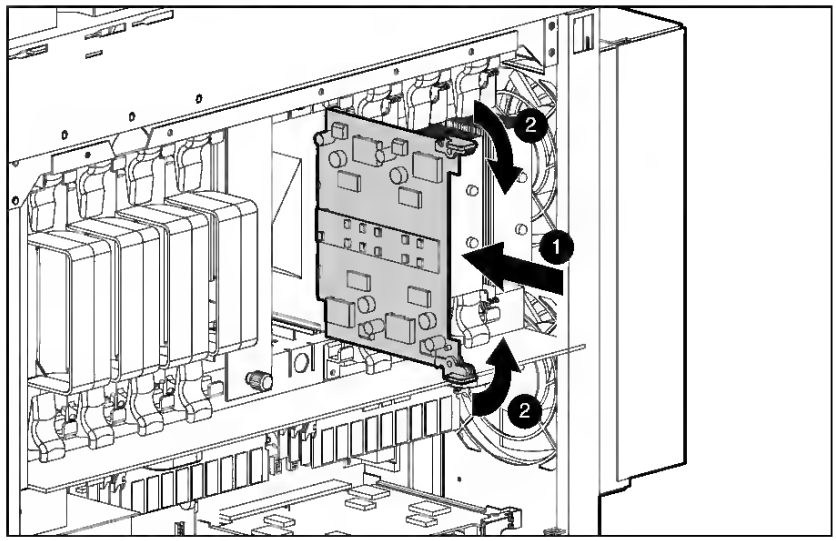


Figure 2-45. Replacing a Processor Power Module

**NOTE:** The Processor Power Module is keyed for correct alignment.

Downloaded from www.Manualslib.com manuals search engine

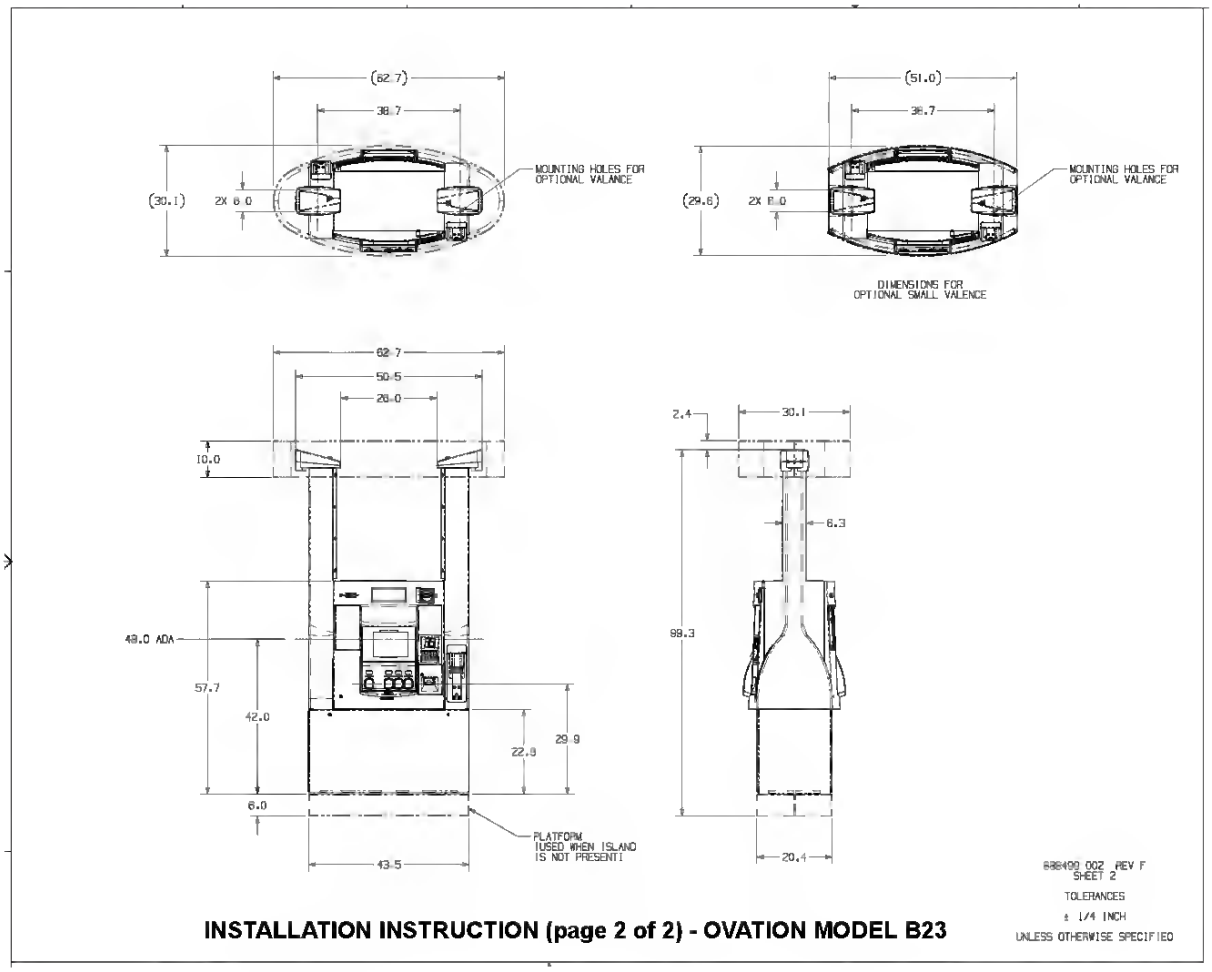


**INSTALLATION INSTRUCTION (page 2 of 2) - OVATION MODEL B23**



Downloaded from www.Manualslib.com manuals search engine

# Product Information

This screen displays information about your system, like the product name, serial number, mainboard ID, mainboard serial number, BIOS version, etc. These entries are for your reference only and cannot be changed.

Downloaded from www.Manualslib.com manuals search engine

## VŠEOBECNÉ

**Napětí napájecího zdroje:** 14,4 V (11 až 16 V dovoleno), stejnosměrné, negativní uzemnění
**Impedance zátěže:** 4 Ω
**Tónové ovládaní:**
Basy ± 10 dB na 100 Hz, Výšky ± 10 dB na 10 kHz
**Výstupní napětí předzesilovače (impedance zátěže):** 2,2 V (10 kΩ)
**Instalační velikost:** 182 (Š) × 53 (V) × 155 (H) mm
**Přiložené příslušenství:** Ochranné pouzdro (1)

- Specifikace a vnější vzhled podléhají změně bez oznámení z důvodu inovace výrobku.

## ZADNÍ PANEL

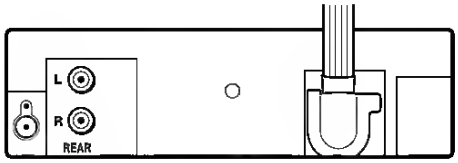


Ohledně podrobností nahlédněte do zvláštní části „INSTALACE A PROPOJENÍ".



Downloaded from www.Manualslib.com manuals search engine

3. Unlock the server, open the front panel, and slide the front panel up and away from the server.

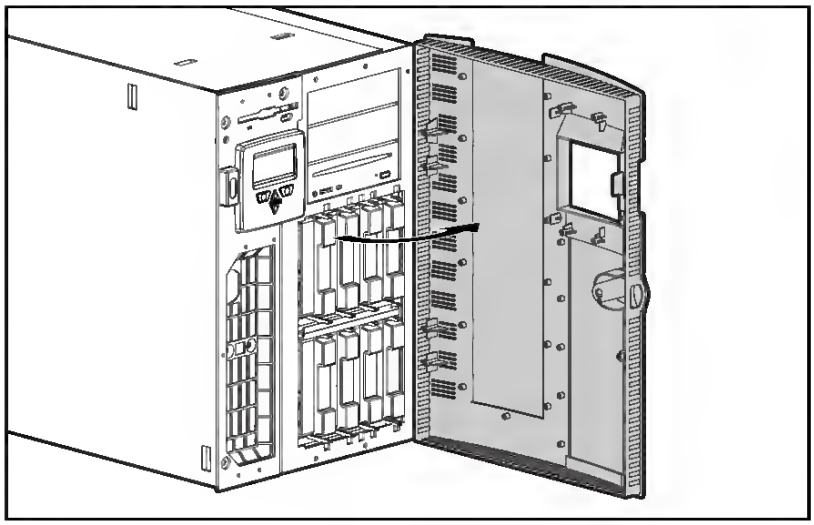

**Figure 4-11.** Removing the front panel

4. Loosen the thumbscrews on the front of the drive cage.
5. Pull out the latch at the back of the drive cage (shown in Figure 4-13) and pull out the drive cage 2 to 3 inches to allow better access to cables.



Downloaded from www.Manualslib.com manuals search engine

Refer to the pages indicated in the black circles for details.
Con respecto a los detalles, consulte las páginas indicadas en los círculos negros.
Pour les détails, reportez-vous aux pages indiquées dans les cercles noirs.

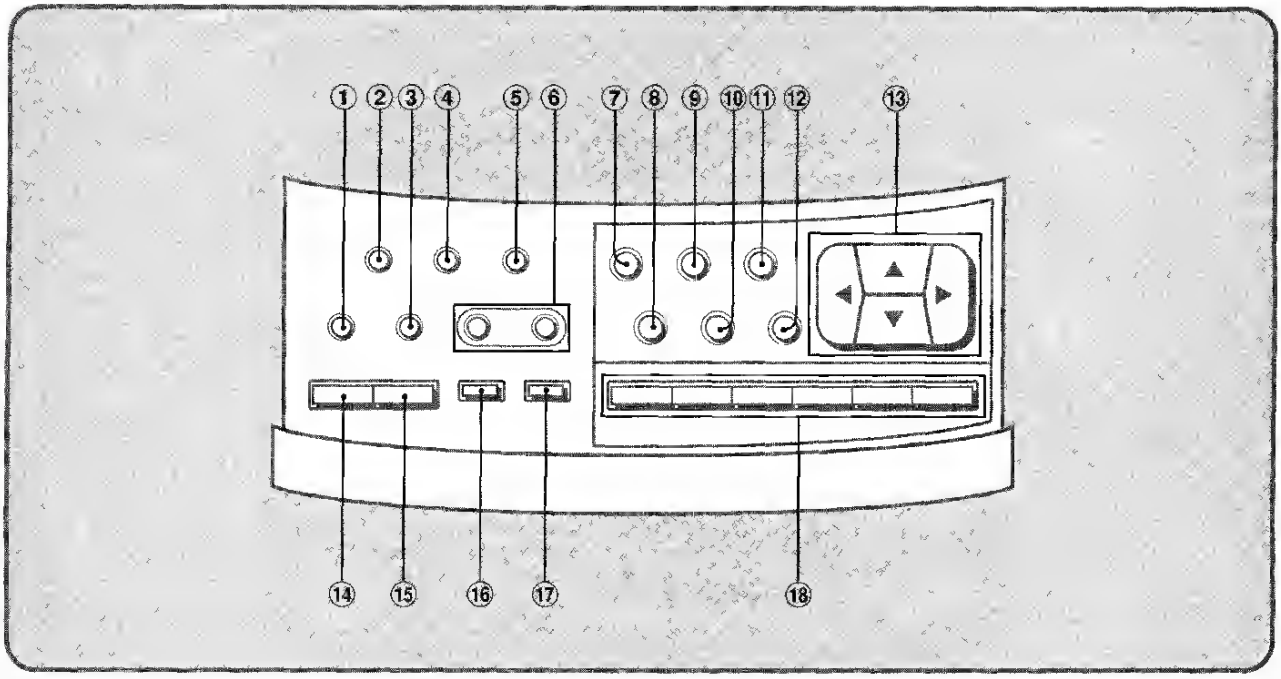


**Control atage**

① TUNING MODE button 27
② DISPLAY MODE button 47
To change the spectrum analyzer display
③ SET button 13 14 29 58 59
④ DEMO (demonstration) button 14
⑤ WAKE UP button 61
⑥ TUNING/CLOCK/TIMER (DOWN, UP) buttons 13 26 58
⑦ DSP/EFFECT button 48 49
⑧ DIRECT button 15
⑨ GEQ (graphic equalizer) button 42 43 44 45 46
⑩ PRGM (program)/MANU (manual) button 42 46
⑪ DSP/GEQ-OFF/ON button 42 43 44 46 48
⑫ MEMORY button 45 57 61
⑬ CURSOR CONTROL buttons 43 44 46 63
⑭ T-BASS button 15
⑮ BBE button 15
⑯ KARAOKE/AUTO VOCAL FADER button 65
⑰ DOLBY SURROUND MODE button 52
⑱ DSP/GEQ preset buttons 42 45 48

**Bandeja de control**

① Botón selector de modo del sintonia (TUNING MODE) 27
② Botón selector de visualización (DISPLAY MODE) 47
Para cambiar el visualizador del analizador de espectro
③ Botón de ajuste (SET) 13 14 29 58 59
④ Boton de demostración (DEMO) 14
⑤ Botón del despertador (WAKE UP) 61
⑥ Botones de sintonía/reloj/temporizador [TUNING/CLOCK/TIMER (DOWN, UP)] 13 26 58
⑦ Boton selector de procesador de señales digitales/efectos (DSP/EFFECT) 48 49
⑧ Boton de entrada directa (DIRECT) 15
⑨ Botón del ecualizador gráfico (GEO) 42 43 44 45 46
⑩ Boton selector de modo de programa/manual (PRGM/MANU) 42 46
⑪ Botón de activacion/desactivación del procesador de señales digitales/ecualizador grafico (DSP/GEO-OFF/ON) 42 43 44 46 48
⑫ Botón de memorización (MEMORY) 45 57 61
⑬ Botones de control del cursor (CURSOR CONTROL) 43 44 46 63
⑭ Botón de refuerzo de graves (T-BASS) 15
⑮ Botón del sistema BBE (BBE) 15
⑯ Botón selector de Karaoke/reducción vocal automatica (KARAOKE/AUTO VOCAL FADER) 65
⑰ Botón de modo perimétrico Dolby (DOLBY SURROUND MODE) 52
⑱ Botones de preajustes del procesador de señales digitales/ecualizador gráfico (DSP/GEO) 42 45 48

**Pupitre de commande**

① Touche de mode d'accord (TUNING MODE) 27
② Touche de mode d'affichage (DISPLAY MODE) 47
Pour changer l'afficheur de l'analyseur de spectre
③ Touche de réglage (SET) 13 14 29 58 59
④ Touche de démonstration (DEMO) 14
⑤ Touche de réveil (WAKE UP) 61
⑥ Touches d'accord/réglage de l'horloge/programmateur [TUNING/CLOCK/TIMER (DOWN, UP)] 13 26 58
⑦ Touche de DSP/effet (DSP/EFFECT) 48 49
⑧ Touche de sortie directe (DIRECT) 15
⑨ Touche d'égaliseur graphique (GEQ) 42 43 44 45 46
⑩ Touche de mode programme/manuel (PRGM/MANU) 42 46
⑪ Commutateur du DSP/égaliseur (DSP/GEQ-OFF/ON) 42 43 44 46 48
⑫ Touche de mémorisation (MEMORY) 45 57 61
⑬ Touches de déplacement du curseur (CURSOR CONTROL) 47 44 46 63
⑭ Touche d'amplification des graves (T-BASS) 15
⑮ Touche de BBE 15
⑯ Touche d'atténuation des voix automatique (KARAOKE AUTO VOCAL FADER) 65
⑰ Touche de DOLBY SURROUND 52
⑱ Touches de préréglage du DSP/GEQ 42 45 48



Downloaded from www.Manualslib.com manuals search engine

| | | |
|---|---|---|
| PCMS_CLOSINGERROR | 126 | Server did not shut down properly |
| PCMS_NORTENGINE | 127 | Server could not properly initialize internal routing component |
| PCMS_NODATASERVER | 128 | Server could not properly initialize internal routing component |

## *PC*MILER|Streets Error Codes*:

| Error Codes | Value | Message |
|---|---|---|
| PCMS_INVALIDPTR | 101 | Invalid pointer |
| PCMS_NOINIFILE | 102 | The INI file was not found |
| PCMS_LOADINIFILE | 103 | Could not load the INI file |
| PCMS_LOADGEOCODE | 104 | Could not load location database |
| PCMS_LOADNETWORK | 105 | Could not load the network database |
| PCMS_MAXTRIPS | 106 | Too many open trips (limit=8) |
| PCMS_INVALIDTRIP | 107 | Invalid trip ID |
| PCMS_INVALIDSERVER | 108 | Invalid server ID |
| PCMS_BADROOTDIR | 109 | Invalid `RootDir` setting in INI file |
| PCMS_BADMETANETDIR | 110 | Invalid `MetaNetDir` setting in INI file |
| PCMS_NOLICENSE | 111 | License infraction: too many users, or licenses not found |
| PCMS_TRIPNOTREADY | 112 | The trip is not ready to calculate |
| PCMS_INVALIDPLACE | 113 | Invalid place name (city, state not found) |
| PCMS_ROUTINGERROR | 114 | Calculation failed: portions of trip are invalid |
| PCMS_OPTERROR | 115 | Optimization failed: portions of the trip are invalid |
| PCMS_OPTHUB | 116 | Cannot optimize a trip in HUB mode |
| PCMS_OPT2STOPS | 117 | Not enough stops to optimize the trip |
| PCMS_OPT3STOPS | 118 | Not enough stops to optimize without changing destination |
| PCMS_NOTENOUGHSTOPS | 119 | Not enough stops to calculate the trip |
| PCMS_BADNETDIR | 120 | Bad network directory |
| PCMS_LOADGRIDNET | 121 | Error loading gridded network |
| PCMS_BADOPTIONDIR | 122 | Bad option directory |
| PCMS_DISCONNECTEDNET | 123 | Disconnected network |
| PCMS_NOTRUCKSTOP | 124 | Truck inaccessible stop |
| PCMS_INVALIDREGIONID | 125 | Invalid region ID |
| PCMS_CLOSINGERROR | 126 | Closing error |

Downloaded from www.Manualslib.com manuals search engine

## Προφυλάξεις για Modems, Συσκευές Τηλεπικοινωνιών ή Τοπικών Δικτύων (LAN)

Για να ελαττώσετε τον κίνδυνο έκθεσης σε ηλεκτροπληξία από την τάση των κτύπων του τηλεφώνου:voltages:

- Μη συνδέετε ή χρησιμοποιείτε modem ή τηλέφωνο (εκτός από ασύρματο) στη διάρκεια ηλεκτρικής καταιγίδας
- Μη χρησιμοποιήσετε τηλεφωνική γραμμή για να αναφέρετε διαρροή καύσιμου αερίου ενώ βρίσκεστε κοντά στη διαρροή.
- Μη συνδέετε ή χρησιμοποιείτε καλώδιο modem ή τηλεφώνου σε υγρό μέρος.
- Αποσυνδέστε το καλώδιο του modem πριν ανοίξετε τη συσκευασία ενός προϊόντος, πριν αγγίξετε ή εγκαταστήσετε εσωτερικά στοιχεία, ή πριν αγγίξετε ένα μη μονωμένο καλώδιο ή ακροδέκτη του modem.
- Μη συνδέετε ακροδέκτες συσκευών τηλεπικοινωνίας ή τηλεφώνου στις υποδοχές της Κάρτας Διεπαφής Δικτύου (NIC).

## Οδηγίες για Προϊόντα με Συσκευές Laser

Για να ελαττώσετε το κίνδυνο έκθεσης σε επικίνδυνη ακτινοβολία:

- Μην επιχειρήσετε να ανοίξετε τα καλύμματα της συσκευής laser. Δεν υπάρχουν εξαρτήματα εντός της συσκευής που μπορούν να επισκευαστούν από το χρήστη.
- Μην εκτελέσετε ελέγχους, ρυθμίσεις ή διαδικασίες στη συσκευή laser εκτός από αυτά που προσδιορίζονται στον οδηγό αυτό.
- Επιτρέψτε μόνο σε εξουσιοδοτημένους τεχνικούς συντήρησης της HP να επισκευάσουν τη συσκευή laser.

Downloaded from www.Manualslib.com manuals search engine

English

# Notice for New Zealand

**For Modem with approval number PTC 211/03/008**

1 The grant of a Telepermit for any item of terminal equipment indicates only that Telecom has accepted that the item complies with minimum conditions for connection to its network. It indicates no endorsement of the product by Telecom, nor does it provide any sort of warranty. Above all, it provides no assurance that any item will work correctly in all respects with another item of Telepermitted equipment of a different make or model, nor does it imply that any product is compatible with all of Telecom's network services.

2 This equipment is not capable, under all operating conditions, of correct operation at the higher speeds for which it is designed. Telecom will accept no responsibility should difficulties arise in such circumstances.

3 Some parameters required for compliance with Telecom's Telepermit requirements are dependent on the equipment (PC) associated with this device. The associated equipment shall be set to operate within the following limits for compliance with Telecom's Specifications:

   a There shall be no more than 10 call attempts to the same number within any 30 minute period for any single manual call initiation, and

   b The equipment shall go on-hook for a period of not less than 30 seconds between the end of one attempt and the beginning of the next call attempt.

4 Some parameters required for compliance with Telecom's Telepermit requirements are dependent on the equipment (PC) associated with this device. In order to operate within the limits for compliance with Telecom's specifications, the associated equipment shall be set to ensure that automatic calls to different numbers are spaced such that there is not less than 5 seconds between the end of one call attempt and the beginning of another.

5 This equipment shall not be set up to make automatic calls to Telecom's 111 Emergency Service.

Downloaded from www.Manualslib.com manuals search engine

Table 3–4 Pin List Sorted by Signal Name (Continued)

| Signal Name | PGA Location | Signal Name | PGA Location | Signal Name | PGA Location |
|---|---|---|---|---|---|
| SysAddIn_L_5 | BA27 | SysAddIn_L_6 | BD28 | SysAddIn_L_7 | BE27 |
| SysAddIn_L_8 | AY26 | SysAddIn_L_9 | BC25 | SysAddInClk_L | BB26 |
| SysAddOut_L_0 | AW33 | SysAddOut_L_1 | BE39 | SysAddOut_L_10 | BE33 |
| SysAddOut_L_11 | AW29 | SysAddOut_L_12 | BC31 | SysAddOut_L_13 | AV28 |
| SysAddOut_L_14 | BB30 | SysAddOut_L_2 | BD36 | SysAddOut_L_3 | BC35 |
| SysAddOut_L_4 | BA33 | SysAddOut_L_5 | AY32 | SysAddOut_L_6 | BE35 |
| SysAddOut_L_7 | AV30 | SysAddOut_L_8 | BB32 | SysAddOut_L_9 | BA31 |
| SysAddOutClk_L | BD34 | SysCheck_L_0 | L7 | SysCheck_L_1 | AA5 |
| SysCheck_L_2 | AK8 | SysCheck_L_3 | BA13 | SysCheck_L_4 | L39 |
| SysCheck_L_5 | AA41 | SysCheck_L_6 | AM40 | SysCheck_L_7 | AY34 |
| SysData_L_0 | F14 | SysData_L_1 | G13 | SysData_L_10 | P6 |
| SysData_L_11 | T8 | SysData_L_12 | V8 | SysData_L_13 | V6 |
| SysData_L_14 | W7 | SysData_L_15 | Y6 | SysData_L_16 | AB8 |
| SysData_L_17 | AC7 | SysData_L_18 | AD8 | SysData_L_19 | AE5 |
| SysData_L_2 | F12 | SysData_L_20 | AH6 | SysData_L_21 | AH8 |
| SysData_L_22 | AJ7 | SysData_L_23 | AL5 | SysData_L_24 | AP8 |
| SysData_L_25 | AR7 | SysData_L_26 | AT8 | SysData_L_27 | AV6 |
| SysData_L_28 | AV10 | SysData_L_29 | AW11 | SysData_L_3 | H12 |
| SysData_L_30 | AV12 | SysData_L_31 | AW13 | SysData_L_32 | F32 |
| SysData_L_33 | F34 | SysData_L_34 | H34 | SysData_L_35 | G35 |
| SysData_L_36 | F40 | SysData_L_37 | G39 | SysData_L_38 | K38 |
| SysData_L_39 | J41 | SysData_L_4 | H10 | SysData_L_40 | M40 |
| SysData_L_41 | N39 | SysData_L_42 | P40 | SysData_L_43 | T38 |
| SysData_L_44 | V40 | SysData_L_45 | W41 | SysData_L_46 | W39 |
| SysData_L_47 | Y40 | SysData_L_48 | AB38 | SysData_L_49 | AC39 |
| SysData_L_5 | G7 | SysData_L_50 | AD38 | SysData_L_51 | AF40 |
| SysData_L_52 | AH38 | SysData_L_53 | AJ39 | SysData_L_54 | AL41 |
| SysData_L_55 | AK38 | SysData_L_56 | AN39 | SysData_L_57 | AP38 |
| SysData_L_58 | AR39 | SysData_L_59 | AT38 | SysData_L_6 | F6 |
| SysData_L_60 | AY38 | SysData_L_61 | AV36 | SysData_L_62 | AW35 |
| SysData_L_63 | AV34 | SysData_L_7 | K8 | SysData_L_8 | M6 |
| SysData_L_9 | N7 | SysDataInClk_H_0 | D8 | SysDataInClk_H_1 | P4 |
| SysDataInClk_H_2 | AF6 | SysDataInClk_H_3 | AY6 | SysDataInClk_H_4 | E37 |
| SysDataInClk_H_5 | R43 | SysDataInClk_H_6 | AG41 | SysDataInClk_H_7 | AV40 |
| SysDataInValid_L | BD22 | SysDataOutClk_L_0 | G11 | SysDataOutClk_L_1 | U7 |
| SysDataOutClk_L_2 | AG7 | SysDataOutClk_L_3 | AY8 | SysDataOutClk_L_4 | H36 |



Downloaded from www.Manualslib.com manuals search engine

## MPEG-1 file for VCD

A VCD is simply a special version of a CD-ROM. The exciting thing about this format is that it can be read by CD-ROMs, VCD players, or even DVD players.

Just about any format: AVI, MPEG-1, or MPEG-2, can be played back on a computer. When you want to create a VCD file, however, you need to use a special WhiteBook standard MPEG-1 file that has very technical specifications. Fortunately, creating such a file is easy with Ulead VideoStudio.

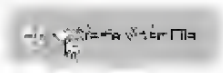

Create Video File submenu displays a list of file types

***To create an MPEG-1 file for VCD:***

1. Open your project and click the **Finish Step**.
2. Click **Create Video File** arrow to display a submenu of file types.
3. Choose **NTSC VCD** or **PAL VCD**, depending on your TV standard. The **Create Video File** dialog box is displayed. Enter a file name and click **Save** to render your movie.

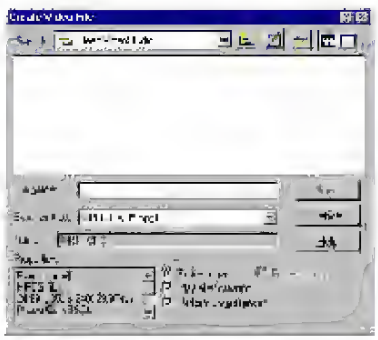

**Note** MPEG-1 is a highly compressed format that maintains very good quality. Once the file is created, you can use Ulead DVD Wizard to write (burn) the CD on your CD writer. Simply follow the instructions to write your movie to the correct location on the CD. Keep in mind that the quality of your blank CD can affect the quality of your final output. Remember also that not all stand-alone players can play VCDs created on your computer.



Downloaded from www.Manualslib.com manuals search engine

# Appendix B
# Notices

Downloaded from www.Manualslib.com manuals search engine

## Accessing DIMM Sockets on the System Board

**WARNING:** Before removing the top panel, ensure that the computer is turned off and that the power cord is disconnected from the electrical outlet.

To reduce the risk of personal injury from hot surfaces, allow the internal system components to cool before touching them.

**CAUTION:** To prevent loss of data or damage to the equipment, place the system in STANDBY before removing the side access panel. When this panel is removed, the power supply is disabled until the panel is properly replaced.

1. Loosen the thumbscrew.
2. Slide the top access panel towards the rear of the unit about 2 inches and lift away from the unit.

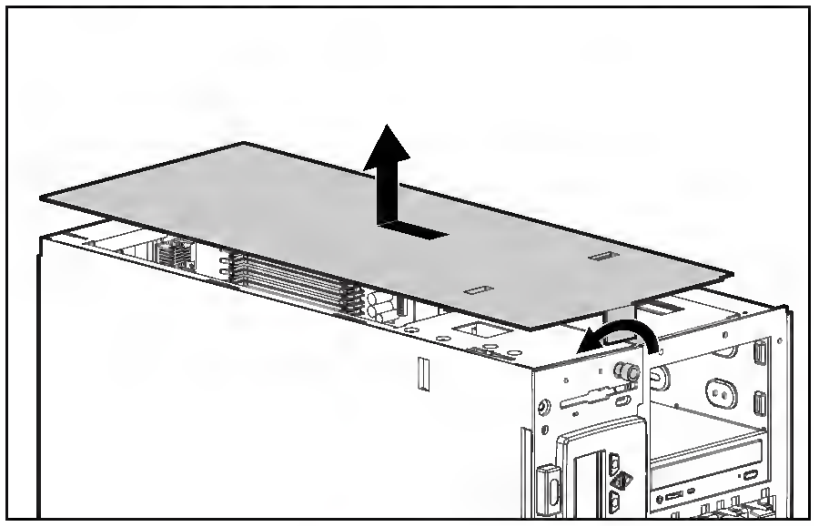

**Figure 4-19.** Removing the side panel



Downloaded from www.Manualslib.com manuals search engine

### Microprocessor

- Mobile AMD Athlon XP1400+, XP1600+, or higher processor.

### Memory

- Standard 128 or 256 MB main memory using Synchronous Dynamic Random Access Memory (SDRAM)
- Two user-upgradeable 144-pin industry-standard soDIMM slots (PC-133)
- Maximum of 1GB.
- 512 KB Flash ROM BIOS

### Data storage

- One internal floppy disk drive (3.5", 1.44 MB).
- One E-IDE hard disk (2.5", 9.5mm, UltraDMA-100).
- One internal optical drive.

### Display and video

- 14.1" or 15.0" Thin-Film Transistor (TFT) liquid-crystal display (LCD), displaying 16.7 million colors at 1024 x 768 Extended Graphics Array (XGA) resolution.
- Simultaneous LCD and CRT display

### Audio

- 16-bit stereo audio (AC'97).
- Two built-in stereo speakers.
- Audio ports for microphone-in and headphones.

### Keyboard and pointing device

- 88-/90-key Windows keyboard.
- Ergonomically-centered touchpad pointing device

### I/O ports

- One type III or type II PC Card slot (PCMCIA and CardBus)
- One RJ-11 modem jack (V.90, 56K)
- One RJ-45 network jack (Ethernet 10/100).
- One DC-in jack.
- One parallel port (ECP/EPP).
- One external monitor port
- One microphone-in jack (3.5mm mini jack).

Downloaded from www.Manualslib.com manuals search engine

# Power-On Self-Test

Power-On Self-Test (POST) is a series of diagnostic tests that automatically run on Compaq computers when the system is powered up. POST checks the following assemblies to ensure that the computer system is functioning properly:

- System ROM
- Keyboard
- Power supply
- System board
- Memory
- Memory expansion boards
- Controllers
- Diskette drives
- Hard drives
- Fans

## POST Error Messages

If POST finds an error in the system, an error condition is indicated by an audible and visual message. If an error code displays on the screen during POST or after resetting the system, use the instructions in the POST Error Messages table (Table 3-2).

**NOTE:** Many of the actions listed require you to run Diagnostics or the System Configuration Utility. Steps for running these utilities are provided following the POST Error Messages tables

The Recommended Action column in Table 3-2 lists the steps necessary to correct the problem. After completing each step, run the Diagnostics program to verify whether the error condition has been corrected. If the error code is redisplayed, perform the next step, and then run the Diagnostics program again. Follow tbis procedure until Diagnostics no longer detects an error condition.

Downloaded from www.Manualslib.com manuals search engine

## POST Error Messages

If POST finds an error in the system, an error condition is indicated by an audible or visual message. If an error code displays on the screen during POST or after resetting the system, follow the instructions in the POST Error Messages table.

**NOTE:** Many of the actions listed in the POST Error Message table require you to run the Diagnostics or the Compaq System Configuration Utility. Steps for running these utilities are provided after the POST Error Messages tables.

The Recommended Action Column in tbe POST Error Message table lists the steps necessary to correct the problem. After completing each step, run the Diagnostics program to verify whether the error condition has been corrected. If the error code reappears, perform the next step, then run the Diagnostics program again. Follow this procedure until the Diagnostics Utility no longer detects an error condition.

**Table 3-2**
**POST Error Messages**

| Error Code | Audible Beeps | Probable Source of Problem | Recommended Action |
|---|---|---|---|
| A Correctable Memory Error occurred prior to this power-up | None | A memory module has experienced an error which, while recoverable, has generated a predictive failure warning. | Run Compaq Diagnostics to identify and replace the appropriate memory module. |
| A Critical Error occurred prior to this power-up | None | A catastrophic system error, which caused the server to crash, has been logged. | Run Diagnostics. Replace failed assembly as indicated. |
| *Beeps only* | 2 long | No valid memory is present in the system. | 1. If no memory modules are present, install at least one memory module to conform to minimum hardware configuration specifications.<br>2. Reseat all installed memory modules.<br>3. If the system contains more than one memory module, remove one module, and restart the server. Repeat as needed to isolate the bad memory module. |
| *Beeps only* | 2 long, 2 short | The power has cycled because the temperature is too hot. The processor fan is not installed, or is not spinning. | Check fans. |

*continued*

Downloaded from www.Manualslib.com manuals search engine

*Note:* *To verify that your HMI-640S has joined the network and is properly connected with your host PC, just try to access your host PC through the Windows CE Explorer by typing* //host_name_of_host_PC *in the address bar. Press* ***Enter*** *to search for the host PC. If the connection is successful, you can see the network shares that is available from the host PC. Or you can simply "ping" your HMI-640S from your host PC to make sure TCP/IP is working. (e.g.* c:\ping IP_address_of_your_HMI-640S or device_name_of _your_HMI-640S )

## 6.2 Networking via RS-232

RS-232 is a time-honored standard interface for industrial automation. It is very convenient to implement albeit much more limited in its communication distance. The HMI-640S is provided with a RS-232 port, from which it can be connected to your host PC via a NULL modem cable.

*Please follow the procedure described below to set up network connection between HMI-640S and host PC via RS-232 interface:*

1. Before connecting to RS-232, first make sure your COM port service on the host PC has been enabled.

*Note:* *If you are running Windows 95/98 on the host PC, the* ***Com*** *port service should be enabled on default without extra installation of other component. On the other hand, if you are running Windows NT on the host PC, make sure the RAS (i.e.* Remote Access Service*) service on your host PC system is running properly. If you have not installed the RAS service, you must install it on your system.*

2. Use the DB-9 NULL modem cable (that accompanies your HMI-640S) to connect the HMI-640S through its RS-232 port to the COM port of your host PC.



Downloaded from www.Manualslib.com manuals search engine

## 1700 – 1799, Hard Drive Test Error Codes

The 1700 series of Diagnostic error codes identifies failures with hard drives, hard drive controller boards, hard drive cabling, and system board functions. If the system uses a drive array controller, see the section for Array Diagnostic Utility (ADU).

**Table 3-12**
**Hard Drive Test Error Codes**

| Error Code | Description | Recommended Action |
|---|---|---|
| 1700-xx | Hard drive ID drive types test failed. | 1. Run the System Configuration Utility and verify the drive type |
| 1701-xx | Hard drive format test failed. | 2. Replace the hard drive signal and power cables and retest. |
| 1702-xx | Hard drive read test failed. | 3. Replace the hard drive controller and retest. |
| 1703-xx | Hard drive write/read/compare test failed. | 4. Replace the hard drive and retest. |
| 1704-xx | Hard drive random seek test failed. | 5. Replace the system board and retest. |
| 1705-xx | Hard drive controller test failed. | |
| 1708-xx | Hard drive format bad track test failed. | |
| 1709-xx | Hard drive reset controller test failed. | |
| 1710-xx | Hard drive park head test failed. | |
| 1715-xx | Hard drive head select test failed. | |
| 1716-xx | Hard drive conditional format test failed. | |
| 1717-xx | Hard drive ECC* test failed. | |
| 1719-xx | Hard drive power mode test failed. | |
| 1736-xx | Drive Monitoring failed. | |
| 1799-xx | Invalid hard drive type failed. | |

**Note:** * Error Checking and Correcting



Downloaded from www.Manualslib.com manuals search engine

**⚠ WARNING**

**The exhaust system can get extremely hot during normal operation and cause serious burns. To avoid a serious burn, never touch a hot muffler or exhaust pipe during oil draining.**

- Lift the cargo bed and support it with the hook.
- Remove the filler plug.

**⚠ WARNING**

**Oil on tires can make them slippery which can cause an accident and injury. When draining or filling the transmission case, be careful that no oil gets on the tires or rims. Clean off any oil that inadvertently gets on them with soap and water.**

- After the oil has completely drained out, install the drain plug with its gasket. Tighten it to the specified torque. If the gasket is damaged, replace it with a new one.
- Fill the transmission case up to the "H" (High) line on the dipstick with a good quality oil as specified in the table.

**Tightening Torque**

| | |
|---|---|
| Drain Plug | 15 N·m (1.5 kgf·m, 11 ft·lb) |

**Transmission Case Oil Type**

| |
|---|
| API "GL-5" Hypoid gear oil<br>above 5°C (41°F) SAE 90<br>below 5°C (41°F) SAE 80 |

**Transmission Case Oil Capacity**

| | |
|---|---|
| KAF400A | 2.4 L (2.5 US qt) |
| KAF400B | 2.2 L (2.3 US qt) |

- Install the filler plug and dipstick.

## System Passwords

The System Passwords menu is used to set up passwords to limit access to the system and its setup options. The following is a list of selections found in this menu with an explanation of each option:

**Setup Password** allows a setup password to be set. This password is used to keep unauthorized users from modifying the setup options.

**Power-On Password** allows a power-on password to be set. This password is used to keep unauthorized users from powering on the system.

**Network Server Mode** allows the user to disable or enable the ability to start the system with a locked keyboard or without a keyboard. The keyboard is unlocked by entering the Power-On Password.

## System Identification

The System Identification menu is used to identify the system.

**Asset Tag** allows the user to identify the system with an Asset Tracking Number.

## Advanced Options

The Advanced Options menu is used to configure advanced options of the system. The following is a list of selections found in this menu with an explanation of each option:

**MPS Table Mode** allows the user to change the APIC table setting. This selection should be automatically set by **OS Selection**, but it allows the user to override the automatic selection.

**Post Speed Up** allows the user to enable or disable the quick or slow start process. The slow start process performs a complete memory test.

**Automatic Server Recovery** allows the user to enable or disable the Automatic Server Recovery option.

**Wake Support (PME)** allows the user to enable or disable Wake Support (PME).

**Floppy Controller** allows the user to enable or disable the floppy controller.

**Primary IDE Controller** allows the user to enable or disable the primary IDE controller.

For use with 1-GHz or greater Intel Pentium III processor-based server models only

Downloaded from www.Manualslib.com manuals search engine

# Upgrading the CPU

## Removing the CPU

***Note:*** *Observe the ESD precautions on page 73 when installing or removing a system component.*

Before you can replace or upgrade your processor, you need to remove the previously installed processor on the system board.

Follow these steps to remove the CPU:

1. On the system board, locate the CPU mounted on the socket.
2. Detach the fan/heatsink cable connectors.

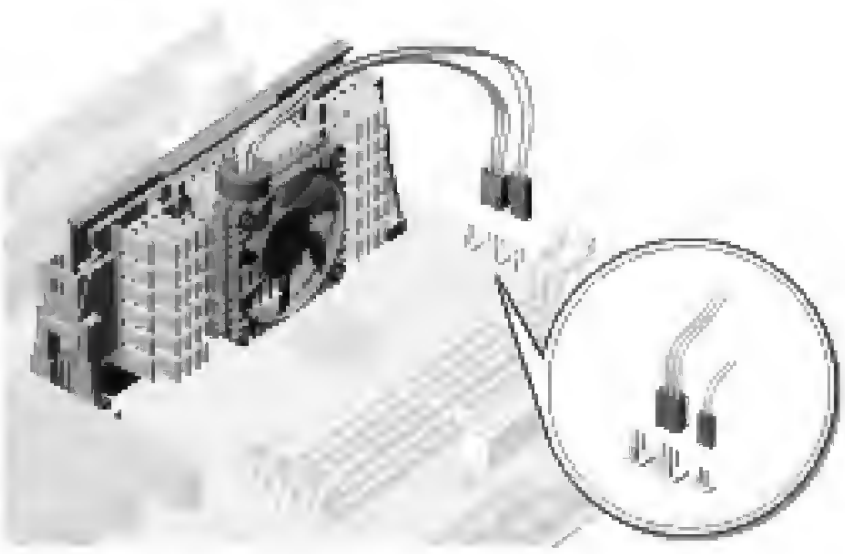

Downloaded from www.Manualslib.com manuals search engine

**Table C-1: Summary of RAID Methods** *continued*

| | RAID 0 | RAID 1+0 | RAID 5 |
|---|---|---|---|
| Tolerates failure of one physical drive? | No | Yes | Yes |
| Tolerates simultaneous failure of >one physical drive? | No | Only if no two failed drives are in a mirrored pair | No |
| Read performance | High | High | High |
| Write performance | High | Medium | Low |
| Relative cost | Low | High | Medium |

*Values for usable drive space are calculated with these assumptions:

- All physical drives in the array have the same capacity.
- Online spares are not used.
- No more than 14 physical drives are used for RAID 5. (This number is recommended so that the risk of logical drive failure is kept low. See Appendix D for further information.)

**Table C-2: Choosing a RAID Method**

| Most Important | Also Important | Suggested RAID Level |
|---|---|---|
| | I/O performance | RAID 1+0 |
| Cost effectiveness | I/O performance | RAID 5 (RAID 0 if fault tolerance is not required) |
| I/O performance | Cost effectiveness | RAID 5 (RAID 0 if fault tolerance is not required) |
| | Fault tolerance | RAID 1+0 |

# PARTS INDEX INDICE DE LAS PARTES NOMENCLATURE

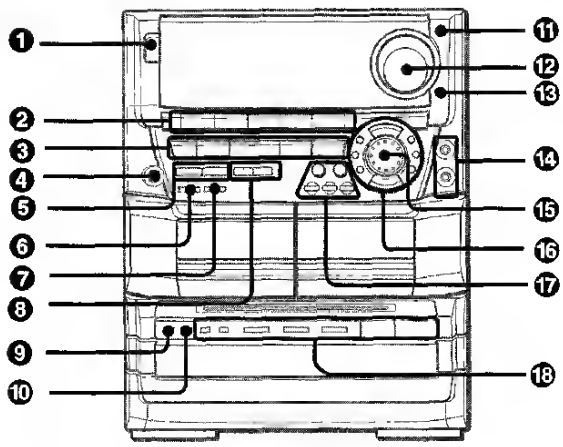

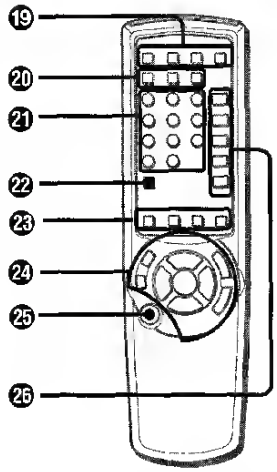

| Name/Nombre/Nom | Page/Página/Page |
|---|---|
| ❶ POWER | 6,15,27-29 |
| ❷ TAPE DECK 1/2 | 6,16,17,20,21 |
| TUNER BAND | 6,15,20,27 |
| VIDEO/AUX | 6,20,27,28 |
| CD | 6,18,20,22,23,25 |
| MD | 6,20,28 |
| ❸ II SET | 15,16,18,20,26,27 |
| ■ CLEAR | 8,15-23,25,26,29 |
| ◄► DIRECTION/PRESET | 8,15-18 |
| ◄◄/I◄◄ DOWN | 8,15-19,22,23,26,27 |
| ►►/►►I UP | 8,15-19,22,23,25-27 |
| ❹ PHONES | 13 |
| ❺ SYNC DUB | 9,11,12,21 |
| ●REC/REC MUTE | 20-23 |
| ❻ DEMO | 8 |
| ❼ KARAOKE | 24 |
| ❽ T-BASS | 9 |
| BBE | 9 |
| ❾ DOLBY NR | 16,17,20-23 |
| ❿ REV MODE (DECK 2) | 16,17,20 |
| ⓫ MIC | 24 |
| ⓬ VOLUME | 9,13,24,27 |
| ⓭ ECHO | 24 |
| ⓮ MIC 1, 2 | 24 |
| ⓯ MULTI JOG | 8,7,9-15,18,22,23,26,27 |
| ⓰ SURROUND | 14 |
| TIMER | 27 |
| CLOCK | 26 |
| ECO | 6,7 |
| UP | 13 |
| DOWN | 13 |
| GEQ | 13,14 |
| ENTER | 6,7,14,26,27 |
| ⓱ SPICE A, B | 11,12 |
| AUTO SPICE/FILL IN | 11,12 |
| BEAT ON/OFF | 9-11 |
| RHYTHM | 9,10,12 |

| Name/Nombre/Nom | Page/Página/Page |
|---|---|
| ⓲ CD EDIT/CHECK | 18,22,23 |
| CD BLANK SKIP | 19 |
| DISC DIRECT PLAY 1-3 | 18,19,22,23 |
| DISC CHANGE | 18 |
| ▲ OPEN/CLOSE | 18 |
| ⓳ TIMER | 27 |
| SLEEP | 26 |
| MONO TUNER | 15 |
| CLOCK | 26 |
| ⓴ CD EDIT/CHECK | 18,22,23 |
| PRGM | 19 |
| RANDOM/REPEAT | 19 |
| ㉑ 0-9, +10 | 15,18,19,22,23,25 |
| ㉒ DISC DIRECT PLAY | 18,19,22,23,25 |
| ㉓ T-BASS | 9 |
| GEQ | 13,14 |
| KARAOKE | 24 |
| OPEN/CLOSE | 18 |
| ㉔ REC/REC MUTE | 20-23 |
| II SET | 15,16,18,20,26,27 |
| ◄◄/I◄◄ DOWN | 8,22,23,26,27 |
| ►►/►►I UP | 8,22,23,25-27 |
| ■ CLEAR | 8,15-23,25,26,29 |
| ►/◄► PRESET | 8,15-17,25 |
| VOL (∨ , ∧) | 9,13,24,27 |
| ㉕ POWER | 6,27-29 |
| ㉖ TAPE DECK 1/2 | 6,16,17,20,21 |
| TUNER BAND | 6,15,20,27 |
| VIDEO AUX | 8,20,27,28 |
| CD | 6,18,20,22,23,25 |
| MD | 6,20,28 |

For assistance and information

***call toll free 1-800-BUY-AIWA*** (United States and Puerto Rico)

Printed in Malaysia

**AIWA CO.,LTD.**

Downloaded from www.Manualslib.com manuals search engine

# Specifications & Accessories

## SECURITY CONTROL

1. **Physical:** 12-1/2" W x 14-1/2" H x 3" D (318mm x 368mm x 76mm)
2. **Electrical:**
   VOLTAGE INPUT: 16.5VAC from plug-in 25VA transformer, Ademco No. 1321 (in U.S.A.)
   RECHARGEABLE BACKUP BATTERY: 12VDC, 17AH (sealed lead acid type). Charging Voltage: 13.8VDC.
   ALARM SOUNDER: 12V, 2.0 Amp output can drive 12V BELLS or can drive one or two 702 (series connected) self-contained 20-watt sirens. Do **not** connect two 702s in parallel.
   AUXILIARY POWER OUTPUT: 12VDC, 600mA max.
   **Note:** For UL installations, Alarm Sounder plus Auxiliary Power currents should not exceed 600mA total.
   FUSE: Battery (3A) No. 90–12 (PC board may have a PTC device instead of a fuse. The PTC serves as an automatically resetting fuse.)
3. **Communication:**
   FORMAT SUPPORTED:
   **Ademco Contact ID Reporting,** 10 characters/sec., DTMF (TouchTone) Data Tones, 1400/2300Hz ACK, 1400Hz KISSOFF.
   LINE SEIZE: Double Pole
   FCC REGISTRATION No.: 5GBUSA-44003-AL-E
   RINGER EQUIVALENCE: 0.1B
4. **Maximum Zone Resistance:** Zones 1–8 = 300 ohms excluding EOLR standard zones

## COMPATIBLE DEVICES

**Touchpads:** 6150ADT, 6160ADT, 6160VADT, iCenter (AUI), 6270ADT

**Wireless Receivers:** 5881L/5882L: accepts up to 8 transmitters
5881M/5882M: accepts up to 16 transmitters
5881H/5882H: accepts up to system maximum transmitters
5883M (accepts up to 16 transmitters); 5883H (accepts up to system max. transmitters)
5800TM Transmitter Module (used with 5827BD Wireless 2-Way Touchpad)

**Zone Expansion:** 4219 WIRED EXPANSION MODULE
4229 WIRED EXPANSION/RELAY MODULE

**Relay Module:** 4204 RELAY MODULE

**Phone Modules:** 4286 PHONE MODULE

**Long Range Radio** 7845GSMADT, 7845i-ent

**2-Wire Smoke Detector:**

| Detector Type | *System Sensor* Model No. |
|---|---|
| Photoelectric w/heat sensor, direct wire | 2300TB |
| Photoelectric, direct wire | 2400 |
| Photoelectric w/heat sensor, direct wire | 2400TH |
| Photoelectric | 2451 w/B401B base |
| Photoelectric w/heat sensor | 2451TH w/B401B base |
| Ionization, direct wire | 1400 |
| Ionization | 1451 w/B401B base |
| Photoelectric duct detector | 2451 w/DH400 base |
| Ionization duct detector | 1451D w/DH400 base H |
| Low-profile, Photoelectric, w/135°F thermal | 2100T |
| Low-profile, Ionization type, direct wire | 1100 |

**Transformers:** 1321: 16.5VAC, 25VA Plug-In Transformer (No. 1321CN in Canada)
1361X10: 16.5VAC, 40VA Powerline Carrier Device Interface AC Transformer

**Sounders:**

AB12M 10" Motorized Bell & Box
1011BE12M 10" Motorized Bell & Box
702 Outdoor Siren
719 2-Channel Siren
713 High Power Speaker
746 Indoor Speaker
747 Indoor Siren
747PD Two-Tone Piezo Dynamic Indoor Siren
747UL Indoor Siren
748 Dual Tone Siren
749 Speaker/Horn
744 Siren Driver
745X3 Voice Siren Driver
705-820, 5-inch Round Speaker
713 Speaker
WAVE Speaker
WAVE2 Two-Tone Siren
WAVE2PD Two-Tone Piezo Siren
5800WAVE Wireless Siren
System Sensor PA400B (beige)/; PA400R (red) Indoor Piezo Sounder



Downloaded from www.Manualslib.com manuals search engine

| Category | Part Number | Acer P/N |
|---|---|---|
| | Keyboard CHICONY KG-0766 RF2.4 Standard 104KS Black US with new silver color | KB.RF403.135 |
| | Keyboard CHICONY KG-0766 RF2.4 Standard 104KS Black Traditional Chinese with new silver color | KB.RF403.136 |
| | Keyboard CHICONY KG-0766 RF2.4 Standard 104KS Black Simplified Chinese with new silver color | KB.RF403.137 |
| | Keyboard CHICONY KG-0766 RF2.4 Standard 104KS Black US International with new silver color | KB.RF403.138 |
| | Keyboard CHICONY KG-0766 RF2.4 Standard 104KS Black Arabic/English with new silver color | KB.RF403.139 |
| | Keyboard CHICONY KG-0766 RF2.4 Standard 104KS Black Thailand with new silver color | KB.RF403.140 |
| | Keyboard CHICONY KG-0766 RF2.4 Standard 105KS Black Spanish with new silver color | KB.RF403.141 |
| | Keyboard CHICONY KG-0766 RF2.4 Standard 105KS Black Portuguese with new silver color | KB.RF403.142 |
| | Keyboard CHICONY KG-0766 RF2.4 Standard 105KS Black Canadian French with new silver color | KB.RF403.143 |
| | Keyboard CHICONY KG-0766 RF2.4 Standard 107KS Black Brazilian Portuguese with new silver color | KB.RF403.144 |
| | Keyboard CHICONY KG-0766 RF2.4 Standard 105KS Black German with new silver color | KB.RF403.146 |
| | Keyboard CHICONY KG-0766 RF2.4 Standard 105KS Black Italian with new silver color | KB.RF403.147 |
| | Keyboard CHICONY KG-0766 RF2.4 Standard 105KS Black French with new silver color | KB.RF403.148 |
| | Keyboard CHICONY KG-0766 RF2.4 Standard 105KS Black Swedish with new silver color | KB.RF403.149 |
| | Keyboard CHICONY KG-0766 RF2.4 Standard 105KS Black UK with new silver color | KB.RF403.150 |
| | Keyboard CHICONY KG-0766 RF2.4 Standard 105KS Black Dutch with new silver color | KB.RF403.151 |
| | Keyboard CHICONY KG-0766 RF2.4 Standard 105KS Black Swiss/G with new silver color | KB.RF403.152 |
| | Keyboard CHICONY KG-0766 RF2.4 Standard 105KS Black Belgium with new silver color | KB.RF403.153 |
| | Keyboard CHICONY KG-0766 RF2.4 Standard 105KS Black Icelandic with new silver color | KB.RF403.154 |
| | Keyboard CHICONY KG-0766 RF2.4 Standard 105KS Black Norwegian with new silver color | KB.RF403.155 |
| | Keyboard CHICONY KG-0766 RF2.4 Standard 104KS Black Hebrew with new silver color | KB.RF403.156 |
| | Keyboard CHICONY KG-0766 RF2.4 Standard 105KS Black Polish with new silver color | KB.RF403.157 |
| | Keyboard CHICONY KG-0766 RF2.4 Standard 105KS Black Slovenian with new silver color | KB.RF403.158 |



Downloaded from www.Manualslib.com manuals search engine

# Connector Interfaces

For the pinouts and signals of these connector interfaces, refer to the Systems Reference Library CD:

- Keyboard (hot-pluggable)
- Pointing Device (Mouse)
- Serial (2)
- Parallel
- Monitor
- SCSI-2 Connector
- Ethernet (RJ-45 and AUI)

Downloaded from www.Manualslib.com manuals search engine

### Contrast

The level of contrast can be adjusted on the Integrated Display by using the **UP** and **DOWN** arrows. Press the **UP** arrow to increase the contrast, and press the **DOWN** arrow to decrease the contrast.

## Navigating the Menus

The Compaq Integrated Management Display is menu-driven and easy to use. Information to navigate and utilize the menus follows.

### Normal Run-time Behavior

When powering up the server, the first IMD screen shows the model number and LCD firmware revision of the server's display.

Next, a series of server Power-On Self-Test (POST) operations is displayed. During POST, the display indicates the server test in progress by a spinning bar beside the menu item. When the test is finished, the IMD shows a check mark by the completed menu item. A check mark means that the test is complete, but does not necessarily mean the test was free from errors.

If an error occurs during POST, the server logs the error to the IMD under Unviewed Events and requires the user to view the error before proceeding to any other menu choices.

If there are no errors, the Idle Screen Text appears. Figure 6-3 shows the default screen but this screen could be different if the text changed during configuration.

### Navigation Buttons

To navigate through the menus, use the four buttons shown in Figure 6-4. The UP and DOWN arrow keys (❷ and ❸) allow the user to move through the menu screens and choose menu items. The right button (❹) acts as an Enter key and allows the server to travel down through the menus. The left button (❶) acts as an Escape key and allows travel back up the menu.

## Drive Monitoring Feotures Are Unobtoinoble

**Description**: ADU is unable to get monitor and performance data due to a fatal command problem (such as drive time-out), or is unable to get data due to these features not being supported on the controller.

**Action**: Check for other errors such as time-outs. If no other errors occur, upgrade the firmware to a version that supports monitor and performance, if desired.

## Drive Monitoring is NOT Enobled for SCSI Port X Drive ID Y

**Description**: The monitor and performance features have not been enabled on this drive.

**Action**: Run the server setup utility to initialize the monitor and performance features.

## Drive Time-Out Occurred on Physicol Drive Boy X

**Description**: ADU issued a command to a physical drive and the command was never acknowledged.

**Action**: The drive or cable may be bad. Check the other error messages on the Diagnostics screen to determine resolution.

## Drive X Indicotes Position Y

**Description**: Message indicates a designated physical drive, which seems to be scrambled or in a drive bay other than the one for which it was originally configured.

**Action**:

1. Examine the graphical drive representation on ADU to determine proper drive locations.
2. Power down the server.
3. Remove drive *X* and place it in drive position *Y*.
4. Rearrange the drives according to the ADU instructions.

## Duplicote Write Memory Error

**Description**: Data cannot be written to the array accelerator board in duplicate due to the detection of parity errors. This is not a data-loss situation.

**Action**: Replace the array accelerator board.

## Error Occurred Reoding RIS Copy from SCSI Port X Drive ID

**Description**: An error occurred while ADU was trying to read the RIS from this drive.

**Action**: HP stores the hard drive configuration information in the RIS. If multiple errors occur, the drive may need to be replaced.

## FYI: Drive (Boy) X is Third-Porty Supplied

**Description**: Third-party supplied the installed drive.

**Action**: If problems exist with this drive, replace it with a supported drive.



Downloaded from www.Manualslib.com manuals search engine

```
        1  Configure an Ethernet Interface
        2  Delete an Ethernet Interface
        3  Display all Interfaces that are configured

    Enter Menu Selection
    [? for help, q to quit, RETURN for menu]
    ==> 1

WARNING !!
        This option will automatically delete each interface that was
        previously configured. It reconstructs the Ethernet interface
        database from scratch and requires the user to reconfigure
        each interface again.

Do you want to continue? [y, n, ?] y

    Enter a name for Ethernet Interface 0
    [? for help, q for menu]
    ==>  morse-e0

    Enter aliases for morse-e0
    Separate each alias with blanks
    Hit return if there are no aliases [q to quit]
    ==>  mor

    Enter morse-e0 internet address (e.g. 154.11.21.1) [q to quit]
    ==> 154.12.21.5

    Enter official name of network [154.12] or q to quit
    ==>  dock-net

    Enter aliases for dock-net
    Separate each alias with blanks
    Hit return if there are no aliases [q to quit]
    ==>    Return

    ==> Is dock-net [154.12] divided into subnets ?  [y, n, ?] y

    Enter name of subnet to be added
    [? for help, q for quit]
    ==>  m-net0

    Enter number of mask bits for this subnet
    [? for help, q for quit]
    ==>  8
    Entering Ethernet interface 0 morse-e0 [154.12.21.5]
    ==> Is this correct?  [y, n] y

    Ethernet interface 0 morse-e0 [154.12.21.5] configured !

    Enter Menu Selection
    [ ? for help, q to quit, RETURN for menu ]
    ==>  q
```





Downloaded from www.Manualslib.com manuals search engine